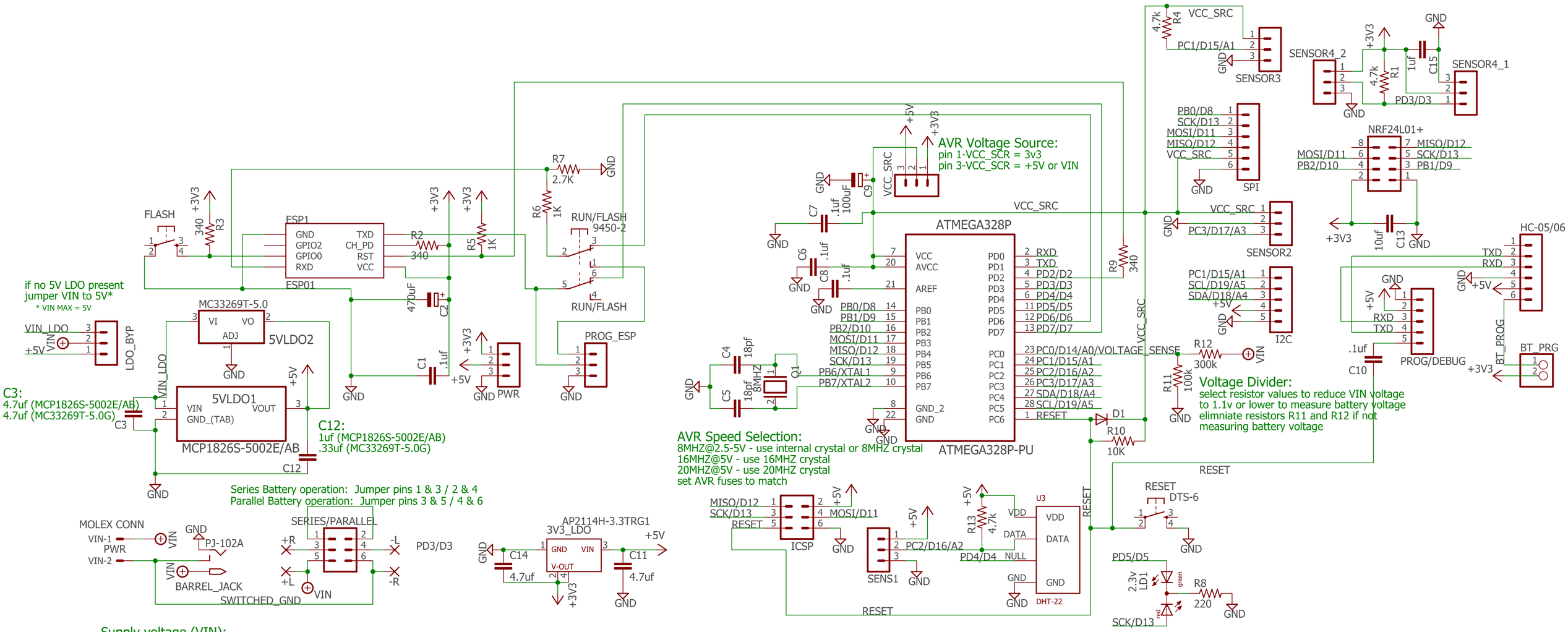

Supply voltage (VIN):

5V operation (atmega@VIN) - supply 2.5 - 5V - (can use two 18650 batteries in PARALLEL mode)
- jumper LDO_BYP to +5V
- jumper VCC_SRC to 5v
- remove 3v3_SHDN jumper (3v3 reg always on) or jumper to PD3 (atmega controlled)
- Atmega will run @ VIN voltage
- VCC_SCR = VIN VOLTAGE
- 5V rail = VIN voltage

3.3V operation (atmega@3.3v) - supply 2.5 - 5V - (can use two 18650 batteries in PARALLEL mode)
- jumper LDO_BYP to +5V
- jumper VCC_SRC to 3.3v
- remove 3v3_SHDN jumper (3v3 reg always on)
- Atmega will run @ 3.3v
- VCC_SCR = 3v3
- 5V rail = VIN voltage

5V operation with LDO
- install recommended 5V LDO or pin-compatible alternative
  - PN# MCP1826S-5002E/AB installed at 5VLDO1- supply 5.3 - 6V (DON'T use 18650 batteries)
  - PN# MC33269T-5.0G (or pin-compatible) installed at 5VLDO2 - supply 6.3 - 20V (can use two 18650 in SERIES mode)
- jumper VCC_SRC to 5v (default)
- remove 3v3_SHDN jumper (3v3 reg always on) or jumper to PD3 (atmega controlled)
- Atmega will run @5V
- VCC_SCR = +5V
- 5V rail = +5V

In all modes ESP8266 and DHT22 will run @3.3V

ADVANCED SENSOR PLATFORM
version 3.0L (3v3 LDO)
April 2017