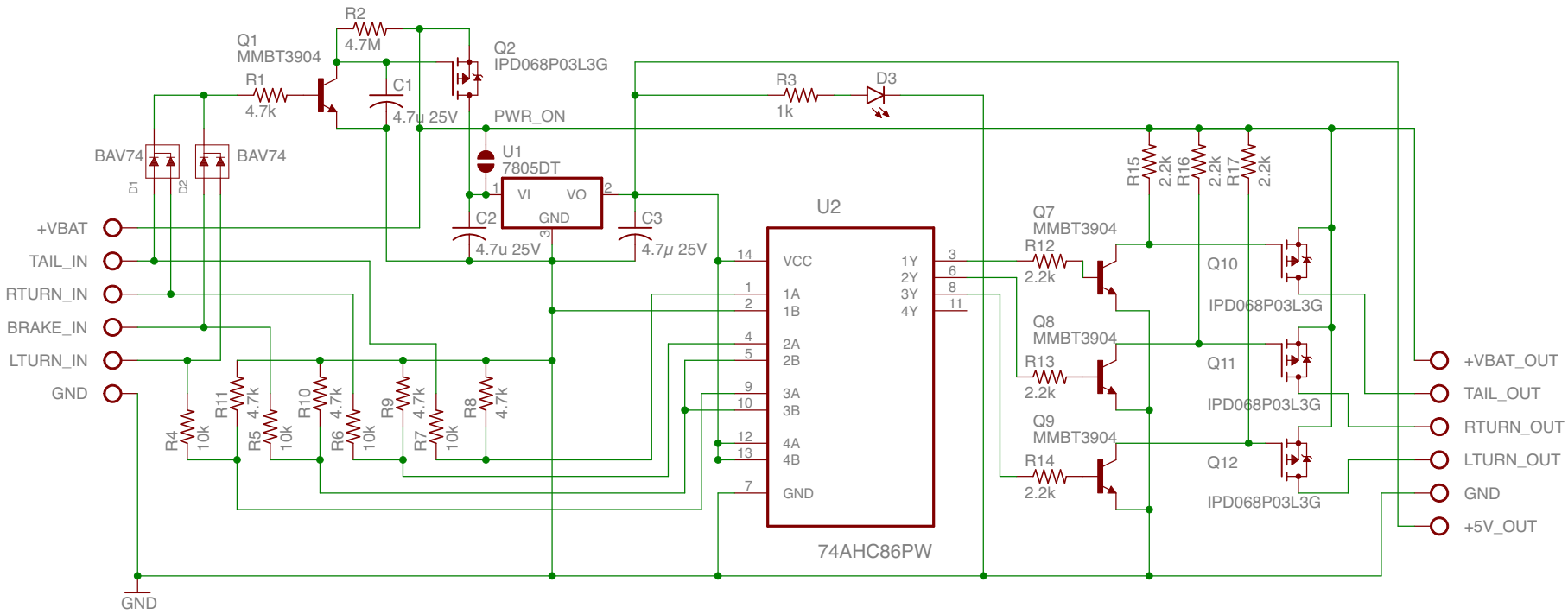

2017-01-02 15:23 /Users/kevpatt/Dropbox/Creltek/Eagle/Projects/Kevin/TrailerLights/TrailerLights 1.1.sch (Sheet: 1/1)