NiceRF 思为无线 **NiceRF Wireless Technology Co., Ltd.**

Product Datasheet V2.0

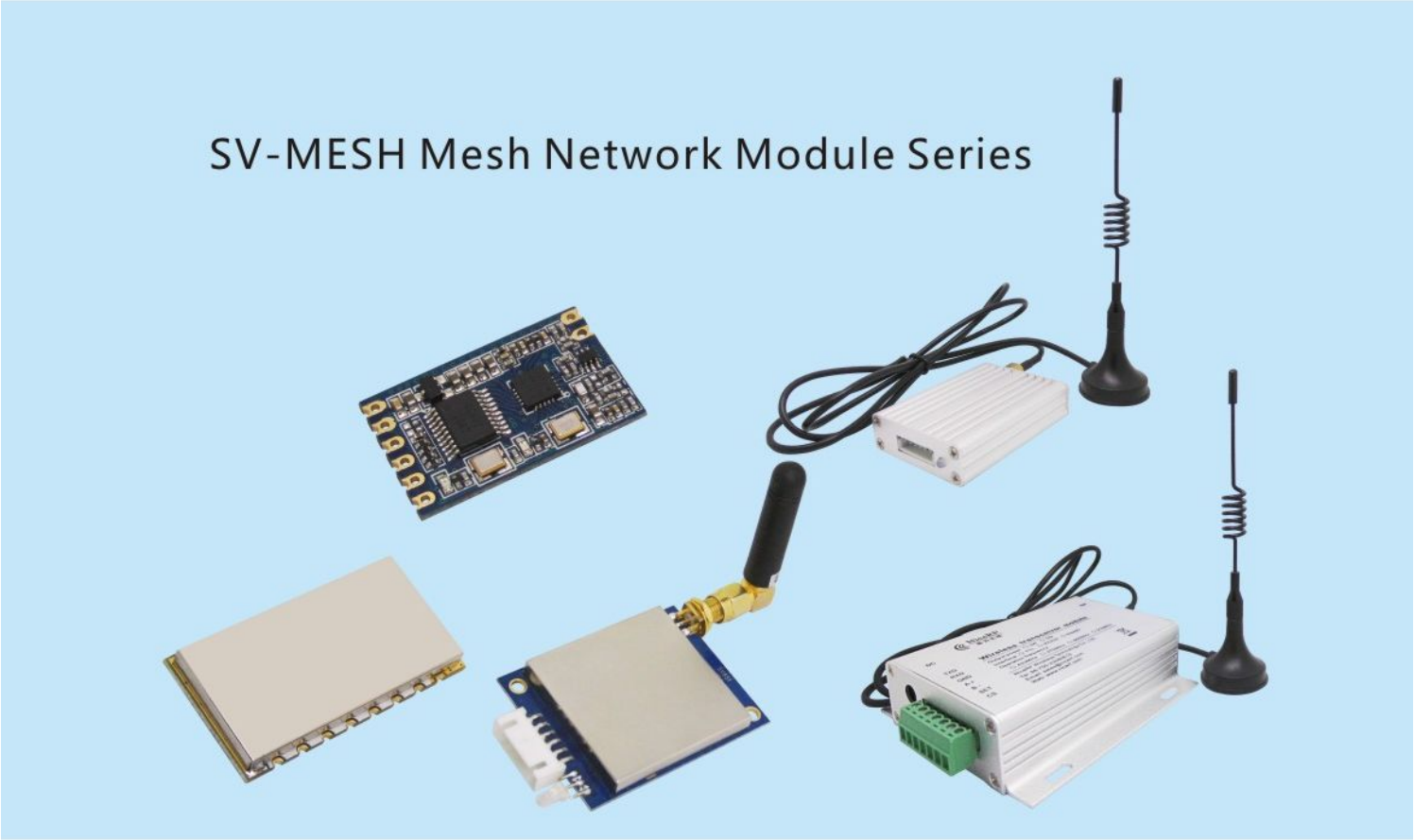

Tel: 86-755-23080616 Fax: 86-755-27838582
Email: sales@nicerf.com Web: www.nicerf.com
Address: 309-314,3/F,Bldg A,Hongdu Business building,Zone 43,

Catalogue

Note: Revision History

Revision	Date	Comment
V1.0	2016-02-20	First release

1. Description

SV-MESH series are ultra long distance MESH network data transceiver modules, which adopts the high performance Silicon Labs Chips. They have NODE and ROUTER working modes, can be as repeaters automatically. It is easy to build network without blind area or distance limitation. To avoid the interference, SV-MESH provides 40 frequency channels and configurable Net ID. SV-MESH is flexible but easy to use , it comes with many parameters, such as: frequency, data rate, output power, Net ID, Node ID. Users can configure the parameters through PC or customer's own device.

2. Features

- Repeat automatically
- GFSK modulation
- 40 channels
- 4 bytes Net ID
- Default 2 bytes Node ID
- Serial parameters configurable
- RSSI
- TTL/RS232/RS485/USB for option
- Max output power: 100mw~5W for option
- Frequency band: 433/470/868/915Mhz for option
- Sensitivity up to -121 dBm
- Working temperature: -40 ~ +85 °C

3. Applications

- Robot control
- Remote control telemetry
- Industrial data acquisition
- Wireless data communication
- Access control system
- Remote meter reading
- Security system
- Home automation

4. Block Diagram

➢ 100mW

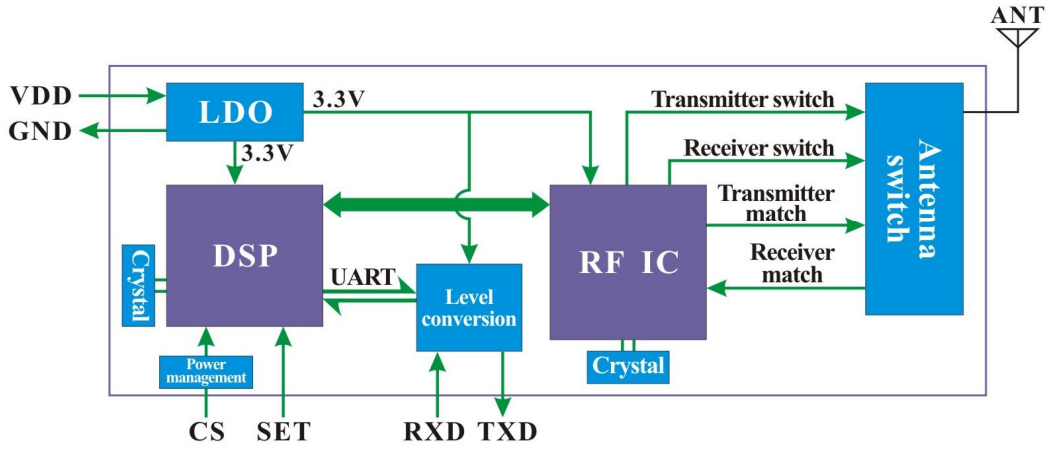

➢ 500mW、2W Series

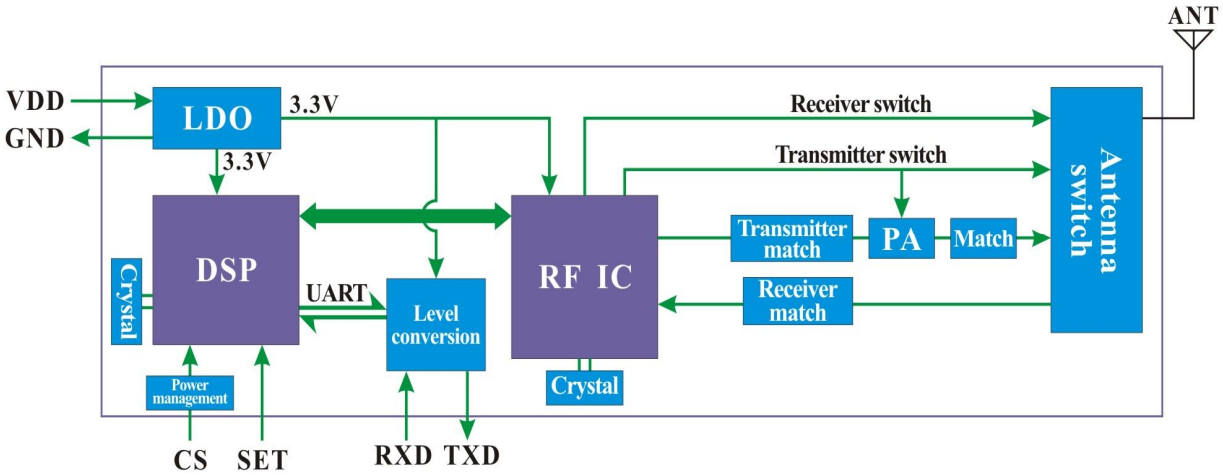

➢ 3W、5W Series

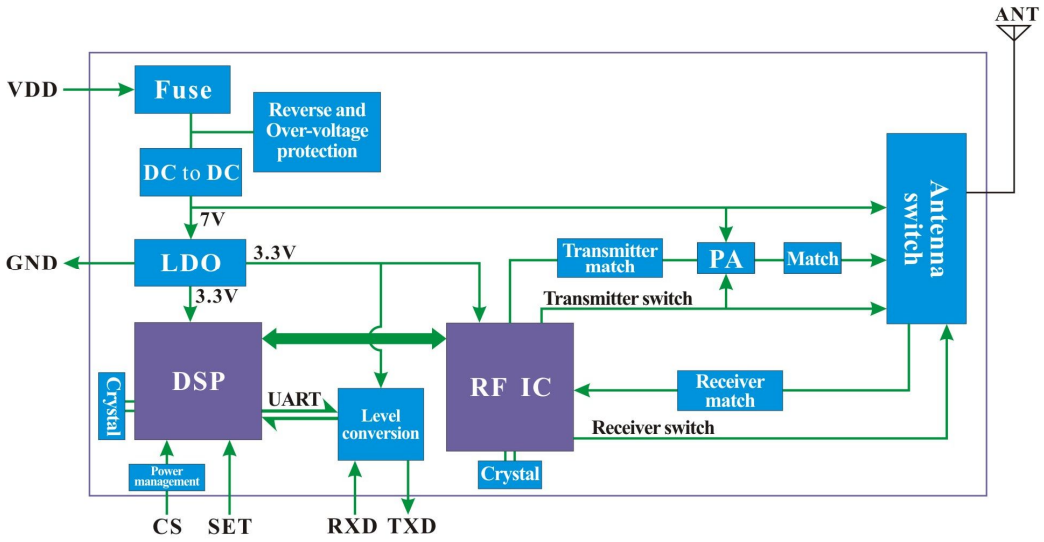

5. Electrical Characteristics

Note：High quality 3.3V LDO is integrated, and Pin CS / SET is 3.3V interface. TXD/RXD is also 3.3V for TTL

Parameters	Min.	Typ.	Max.	Unit	Condition
Working condition					
Voltage range	3.3	5.0	6.5	V	@100mW
	3.3	5.0	6.5	V	@500mW
	4.5	5.0	6.5	V	@2W
	9	12	18	V	@3W
	9	12	30	V	@5W
	4.5	5.0	5.5	V	@USB port
Current consumption					
Sleep current		< 5		uA	@100mW、500mW、2W
		< 5		mA	@3W、5W
Rx current		25		mA	@TTL Level
		34		mA	@RS485 Level
		33		mA	@RS232 Level
		26		mA	@USB Level
Tx current		< 95		mA	@100 mW
		< 350		mA	@500 mW
		< 900		mA	@2W
		< 600		mA	@3W
		< 1.8		A	@5W
RF parameters					
Frequency range	414.92	433.92	453.92	MHz	@433 MHz
	470.92	470.92	509.92	MHz	@470 MHz
	849.92	868.92	888.92	MHz	@868 MHz
	895.92	914.92	934.92	MHz	@915 MHz
Output power	-1	+20	+20	dBm	100 mW
	+20	+27	+27	dBm	500 mW
	+13	+33	+33	dBm	2 W
	+15	+35	+35	dBm	3 W
	+30	+37	+37	dBm	5 W
Data rate	1.2	9.6	115.2	Kbps	GFSK
Rx Sensitivity		-121		dBm	@1.2kbps

6. Operation

- Power on Reset

After powered on reset, the TX LED (Red) and RX LED (Blue) will blink 3 times , The total reset time is arround 2s, as below:

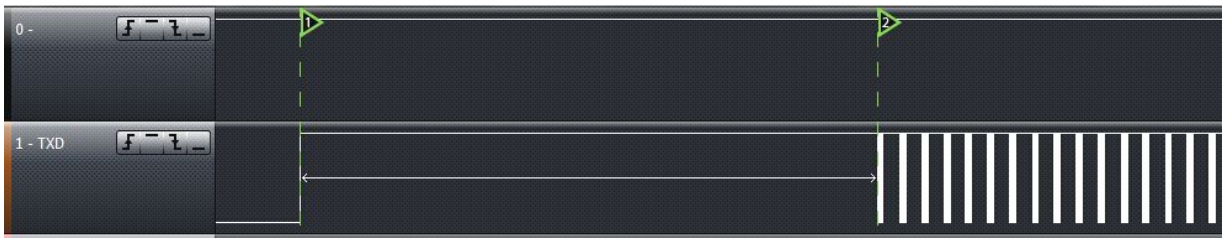

Note：Contact us to customize if you want to shorten the POR time.

◆ Working mode

The CS and SET Pin is internally pulled up. Pull CS pin high or leave it open will make modules enter into working mode, the serial and RF are both in receiving mode then.

In NODE working mode, SV-MESH module stay in receiving mode and wait for the series signal and RF signal.

SV-MESH module can connect with any device which is standard 232/485/TTL interface.

When series signal comes, SV-MESH module will check the input series signal if there is any error, and then transmit the received data out via RF automatically if no errors found.

When RF signal comes, SV-MESH module will check the input RF signals if there is any error, and then transmit the received data out via series port automatically if no errors found.

When one packet is transmitted successfully, the Red LED will blink once.

When one packet is received and verified with no problem, the Blue LED will blink once.

The easiest way to test the module is using computer. The corresponding PC software is “Series Debugging assistant” can be downloaded at : http://www.nicerf.com/downpwd.aspx?id=102, the password for download is “nicerf”. User can use our USB bridge board (SU108 –TTL / SU108-232 /SU108-485) to connect SV-MESH module with computer.

The GUI of the software is as below:

SV-MESH module transmit the data transparently. In one side, signal input to the transmitter, in other side (receiver), the signal will be output same as the input. The signal is encrypted to guarantee the safety during the transmission. Serial port or computer with USB bridge board can be used to input signal to the module. Below is the GUI for data transmission and reception.

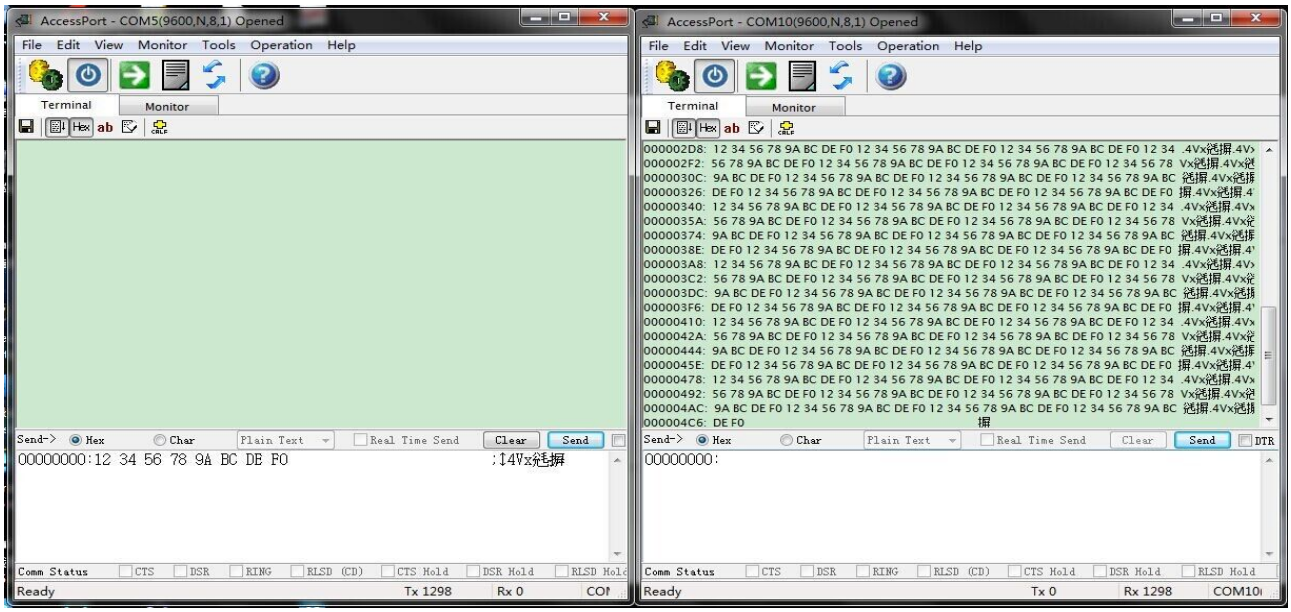

★To ensure the stability of communication, please notice the following tips:

1) Parameter matching

The series parameter between the device and MESH module should be same, frequencies, channels, NET ID and RF parameters should be same in Tx and Rx.

Note: Default setting is: Baud rate=9600bps，data bit=8，stop bit: 1，parity bit: none。

2) Delay Time

Data delay is exist between series input of the transmitter and series output of the receiver. This Delay Time is different from the series data rate, RF data rate and payload length. Detailed value is as below:

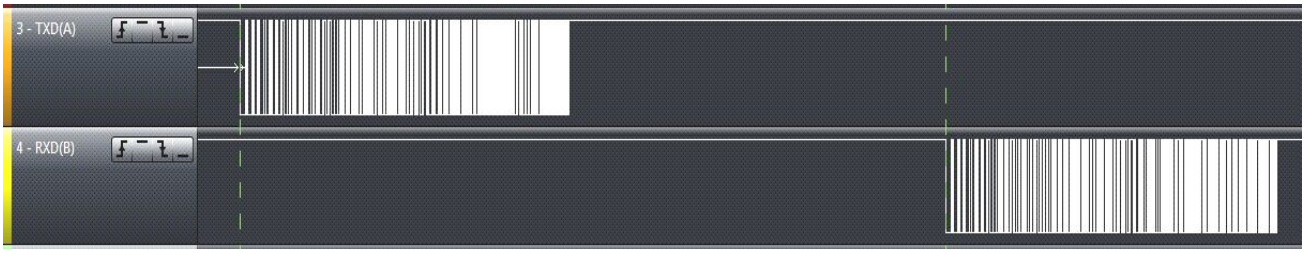

Speed rate	1200	2400	4800	9600	14400	19200	38400	57600	76800	115200
1byte transceiver time(ms)	178	90	49	25	19	16.3	11.1	9.6	9.2	8.4
56bytes transceiver time(ms)	1450	496	252	129	89	68.2	37.6	57.4	22.4	17.2

3) Package transmission

One packet can not exceed 56 bytes. SV-mesh can't work when the payload length exceed 56bytes.

◆ Router mode

When set as ROUTER, in working mode, SV-MESH module can repeat the RF signal in the same network automatically to extend the distance.

Normally, Router module is connected with external power supply to keep long time in receiving mode and repeat the signal to extend the range.

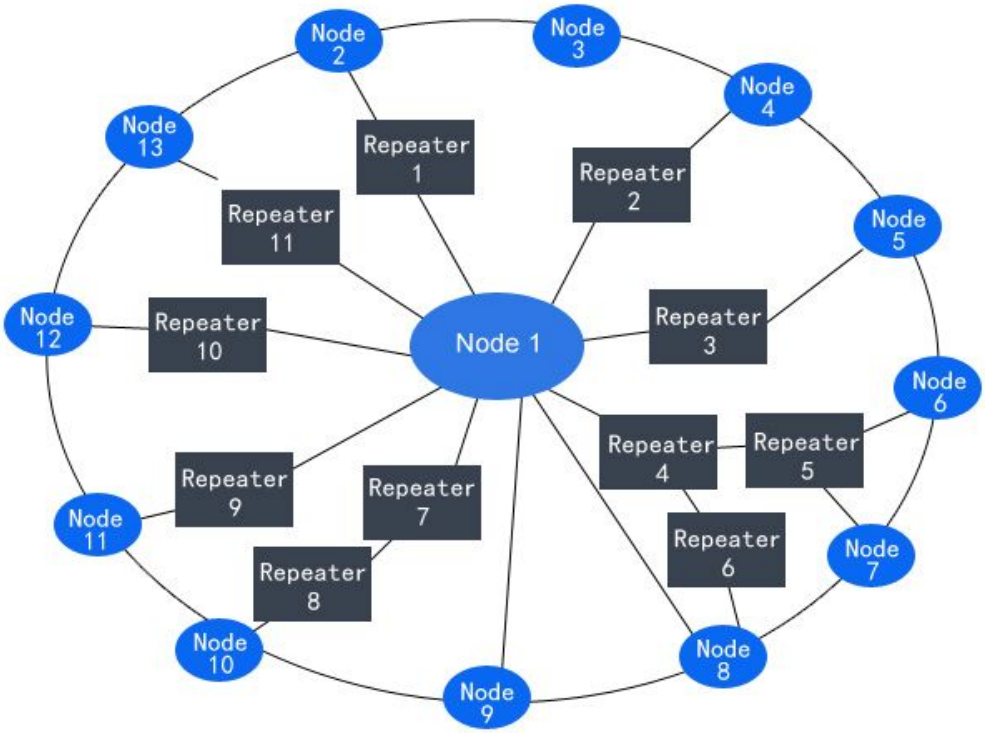

★To ensure the stability and correctness of communication, please notice the following tips:

1) To ensure the normal working of ROUTER, the node should send the data with minimal time interval between adjacent packets. The time interval is different from the data length, RF data rate and baud rate.

When RF data rate is the same as baud rate, and the data length is 56bytes, the minimal time interval as below:

Rate	1200	2400	4800	9600	14400	19200	38400	57600	76800	115200
Time(ms)	929	263	135	71	50	39.1	23	17.7	15.1	12.3

◆ Setting Mode

In working mode, pull low the SET pin to force SV-MESH module into setting mode. When using USB bridge board, simply put on the short cap to enter into setting mode.

In setting mode, both blue and red LED will light on, shown as below:

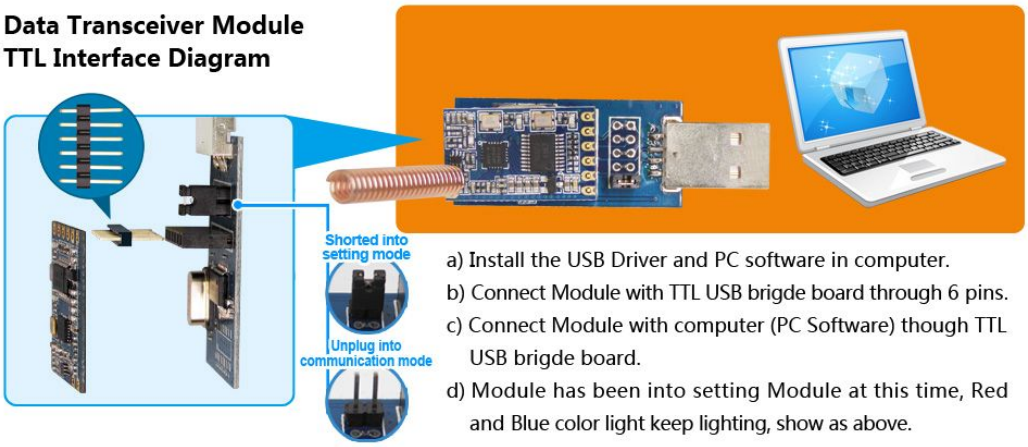

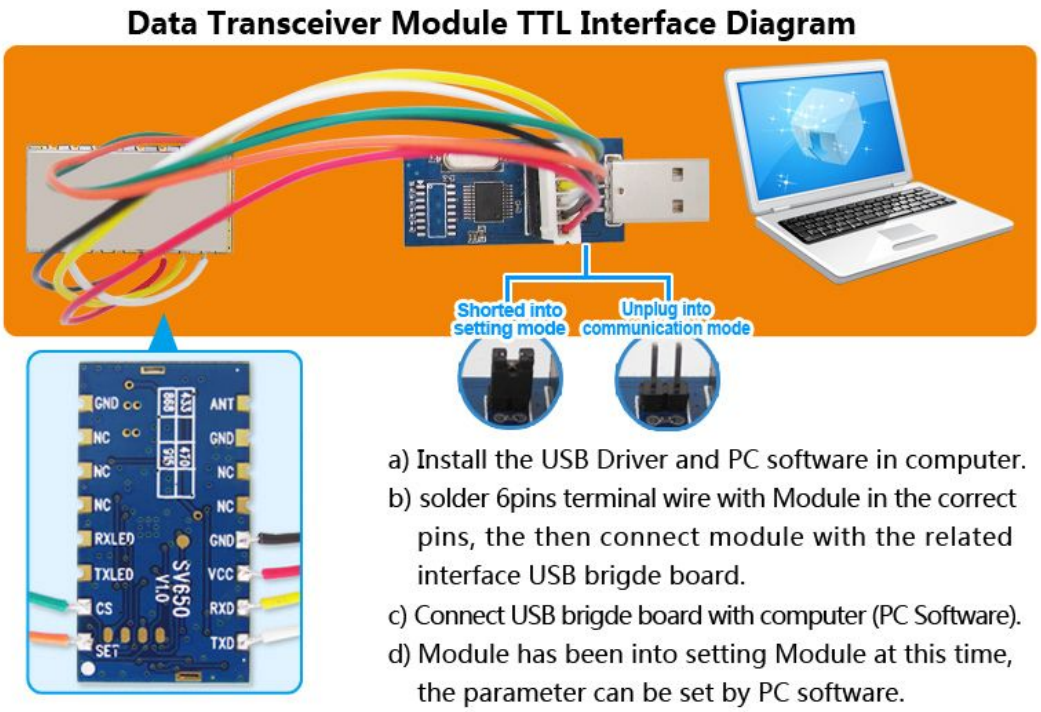

Data Transceiver Module
TTL Interface Diagram

a) Install the USB Driver and PC software in computer.
b) Connect Module with the related interface USB brigde board through 6 pins terminal wire.
c) Connect USB brigde board with computer (PC Software).
d) Module has been into setting Module at this time, Red and Blue color light keep lighting,show as above.

Data Transceiver Module
TTL Interface Diagram

a) Install the USB driver and PC software.
b) Connect module with the related interface bridge board through 6 pins terminal wire.
c) Put the USB bridge board head into the USB of PC.
d) Module has been into setting mode this time, duplex-color light keep lighting, show as above.

Data Transceiver Module
USB Interface Diagram

a) Install the PC software in computer.
b) Connect Module with computer (PC Software) through USB connect wire.
c) Module has been into setting Module at this time, Duplex-color light keep lighting, show as above.

Data Transceiver Module
RS232 Interface Diagram

a) Install PC software in computer.
b) Connect Module with computer (PC Software) through RS232 interface extension cable,connect module with DC 5V Power.
c) Module has been into setting Module at this time, Duplex-color light keep lighting,show as above.

Data Transceiver Module
TTL Interface Diagram

a) Install the USB Driver and PC software in computer.
b) Connect Module with the related interface USB brigde board through 6 pins terminal wire.
c) Connect Module with computer (PC Software) though USB brigde board.
d) Connect module with DC 12V Power.
e) Module has been into setting Module at this time, Duplex-color light keep lighting,show as above.

In setting mode, users can set the parameters by PC software or customer's own device. The parameters will be stored and keep unchanged even powered off.

Step to set the module with PC:

- Download the PC software at: ******, the password is "nicerf".
- Download the USB driver at: http://www.nicerf.com/downpwd.aspx?id=105, the password is "nicerf".
- Install the PC software and USB driver into computer.
- Connect RF module with USB Bridge, put on the short cap, and insert into the PC.
- Open the PC software, the GUI is as below:

Select the right COM port and click "OPEN" button, all the parameters stored in the module will be read out and display, the status bar will appear the message "Device Found".

If SV-MESH module hasn't connected with PC correctly or wrong COM port is chosen, the status bar will show "Device Not Found".

Note: About the Net ID and Node ID

After connected with PC correctly, all the parameters can be set freely including Net ID and Node ID.

The Net ID is the group name for transmitter and receiver, all the transmitter and receiver with the same Net ID can communicate with each other. The only exception is 0000. When the Net ID is set as 0000, it can receive the signal of all the transmitter even the Net ID is not 0000.

The Node ID can be thought as the name of the module. Each module can be set with one Node ID. The Node can set and read out freely. The Node ID can be used in the application which the receiver should identify who is the transmitter. User can read out the Node ID of the module, and add the Node ID into the payload, then in Rx side, it can identify who is the transmitter.

◆ Communication Protocol:

Besides PC, user can set all the parameters by their own device. The communication protocol is as below:

Baud rate=9600 bps; Data bit=8 bits Stop bit:1 Parity bit: none

Command format：AA FA + command + [parameter]

Command is 1bit，parameter is 0 or 14bytes in HEX format.

Return value ended with “\r\n”.

a) Command[AA]: Read module name and version

Instruction: AA FA AA

Return: SVxxx_Verx.x \r\n.

b) Command [01]: Read out all the parameters

Instruction format: AA FA 01

The return value in turn is:

RF channel / RF band / RF data rate / RF power / Serial data rate / Series Data bit / Series Stop bit / Series Parity bit / NET ID / NODE ID /\r\n

For example, when module is default setting, the return are as below:

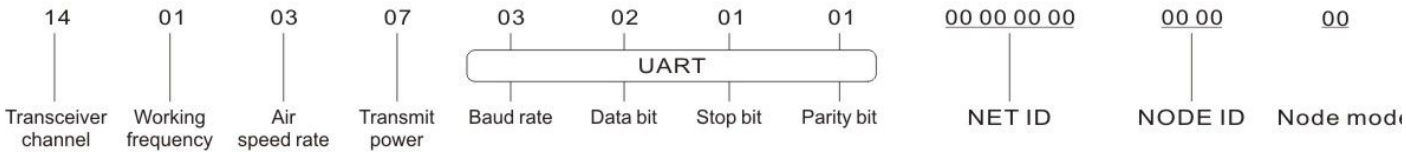

c) Command[02]: Reset to default setting

Instruction format: AA FA 02

The return value in turn is: "OK \ r \ n" or "ERROR \ r \ n"

After this command , the module will reset to default setting ,which is

Frequency : Tx = Rx = CH20 = 433.92 MHz (Band = 433MHz)

RF data rate: Tx = Rx=9600 bps

RF power= 7 (Max output）

Serial: baud rate = 9600 bps Data bit= 8 Bits Stop bit = 1 Bits Parity bit=None

NET ID = 00 00 00 00 NODE ID = 00 00

d) Command[03]: Set the group parameters

The Parameters Length of the command is 17 bytes, and format as follows:

Instruction format: AA FA 03 RF Channel / RF Band / RF Rate / RF Power / Serial transmission date / data bits / stop bits / parity / NET ID / NODE ID

The return is: "OK \ r \ n" or "ERROR \ r \ n

◆ Parameters Description:

1) **RF Channel = RF Frequency**

Each frequency band is divided into 40 channels; user can select one of the 40 channels to use. The interval is 1MHz between two adjacent frequencies，corresponding frequency is as below:

frequency band1	channel	1	2	3	4	5	6	7	8	9	10
433MHz	frequency	414.92	415.92	416.92	417.92	418.92	419.92	420.92	421.92	422.92	423.92
	channel	11	12	13	14	15	16	17	18	19	20
	frequency	424.92	425.92	426.92	427.92	428.92	429.92	430.92	431.92	432.92	433.92
	channel	21	22	23	24	25	26	27	28	29	30
	frequency	434.92	435.92	436.92	437.92	438.92	439.92	440.92	441.92	442.92	443.92
	channel	31	32	33	34	35	36	37	38	39	40
	frequency	444.92	445.92	446.92	447.92	448.92	449.92	450.92	451.92	452.92	453.92

frequency band2	channel	1	2	3	4	5	6	7	8	9	10
470MHz	frequency	470.92	471.92	472.92	473.92	474.92	475.92	476.92	477.92	478.92	479.92
	channel	11	12	13	14	15	16	17	18	19	20
	frequency	480.92	481.92	482.92	483.92	484.92	485.92	486.92	487.92	488.92	489.92
	channel	21	22	23	24	25	26	27	28	29	30
	frequency	490.92	491.92	492.92	493.92	494.92	495.92	496.92	497.92	498.92	499.92
	channel	31	32	33	34	35	36	37	38	39	40
	frequency	500.92	501.92	502.92	503.92	504.92	505.92	506.92	507.92	508.92	509.92

frequency band3	channel	1	2	3	4	5	6	7	8	9	10
868MHz	frequency	849.92	850.92	851.92	852.92	853.92	854.92	855.92	856.92	857.92	858.92
	channel	11	12	13	14	15	16	17	18	19	20
	frequency	859.92	860.92	861.92	862.92	863.92	864.92	865.92	866.92	867.92	868.92
	channel	21	22	23	24	25	26	27	28	29	30
	frequency	869.92	870.92	871.92	872.92	873.92	874.92	875.92	876.92	877.92	878.92
	channel	31	32	33	34	35	36	37	38	39	40
	frequency	879.92	880.92	881.92	882.92	883.92	884.92	885.92	886.92	887.92	888.92

frequency band4	channel	1	2	3	4	5	6	7	8	9	10
915MHz	frequency	895.92	896.92	897.92	898.92	899.92	900.92	901.92	902.92	903.92	904.92
	channel	11	12	13	14	15	16	17	18	19	20
	frequency	905.92	906.92	907.92	908.92	909.92	910.92	911.92	912.92	913.92	914.92
	channel	21	22	23	24	25	26	27	28	29	30
	frequency	915.92	916.92	917.92	918.92	919.92	920.92	921.92	922.92	923.92	924.92
	channel	31	32	33	34	35	36	37	38	39	40

2) **Working Band:**

The working band is as below:

Parameter	01	02	03	04
Frequency	433 MHz	470 MHz	868 MHz	915 MHz
	414.92 ~ 453.92	470.92 ~ 509.92	849.92 ~ 888.92	895.92 ~ 934.92

Note：Changing working band is not suggested.

3) **RF data rate:**

The RF data rate is as below

Parameter	0	1	2	3	4	5	6	7	8	9
TX/RX rate(bps)	1200	2400	4800	9600	14400	19200	38400	57600	76800	115200

4) **RF output power:**

Range: 0-7 levels, The maximum output power is different from different type of module.

The output power is as below:

Set level	0	1	2	3	4	5	6	7
TX/RX power	24.06 dBm	26.38 dBm	27.6 dBm	28.00 dBm	28.00 dBm	28.00 dBm	28.00 dBm	28.00 dBm

5) **Serial baud rate**

Series data rate is as below:

Parameter	0	1	2	3	4	5	6	7	8	9
Serial rate(bps)	1200	2400	4800	9600	14400	19200	38400	57600	76800	115200

6) **Serial data bit**

Series data bit is as below:

Parameter	1	2	3
Data Bits	7 bits	8 bits	9 bits

7) **Serial stop bit**

Series stop bit is as below:

Parameter	1	2
Stop bit	1 bits	2 bits

8) **Serial parity**

Series Parity bit is as below:

Parameter	1	2	3
Parity bit	No	Odd	Even

9) **NET ID：**The Net ID is 4 bytes, and range from 00 00 00 00 to FF FF FF FF

Note: if the modules' NET ID setting are different, then they can't communicate with each other except when the Net ID = 0000, it will receive all the message despite the Net ID is difference.

10) **NODE ID：Read only value**

The Node ID is 2 bytes, range from 00 00 to FF FF.

11）**Mode：** Set as Node when it connected with device to get data，others set as Router.

Parameter	0	1
Mode	NODE	Router

◆ **Sleep mode**

After Power on Reset, the module enters into sleep mode when CS pin is pulled low. In this mode, the current consumption is very small. In Sleep mode, the module can't do any communication and cant' be set even Set Pin is pulled low. All the parameters will be kept unchanged in Sleep mode. User can wake up the module by pulling high the CS Pin.

◆ **RSSI index**

The RSSI index value can only be read out in setting mode. The real time RSSI index is updated by incoming signal.

Instructions format: AA FA 04

Return：RSSI index\00\r\n （hexadecimal，range：0x00~0xff）

RSSI index range: 00 ~ FFh

For example:

Instruction format: AA FA 04

Return:32 00 \r\n.(Signal strength is 0x32)

Relationship between RSSI and input power is as below

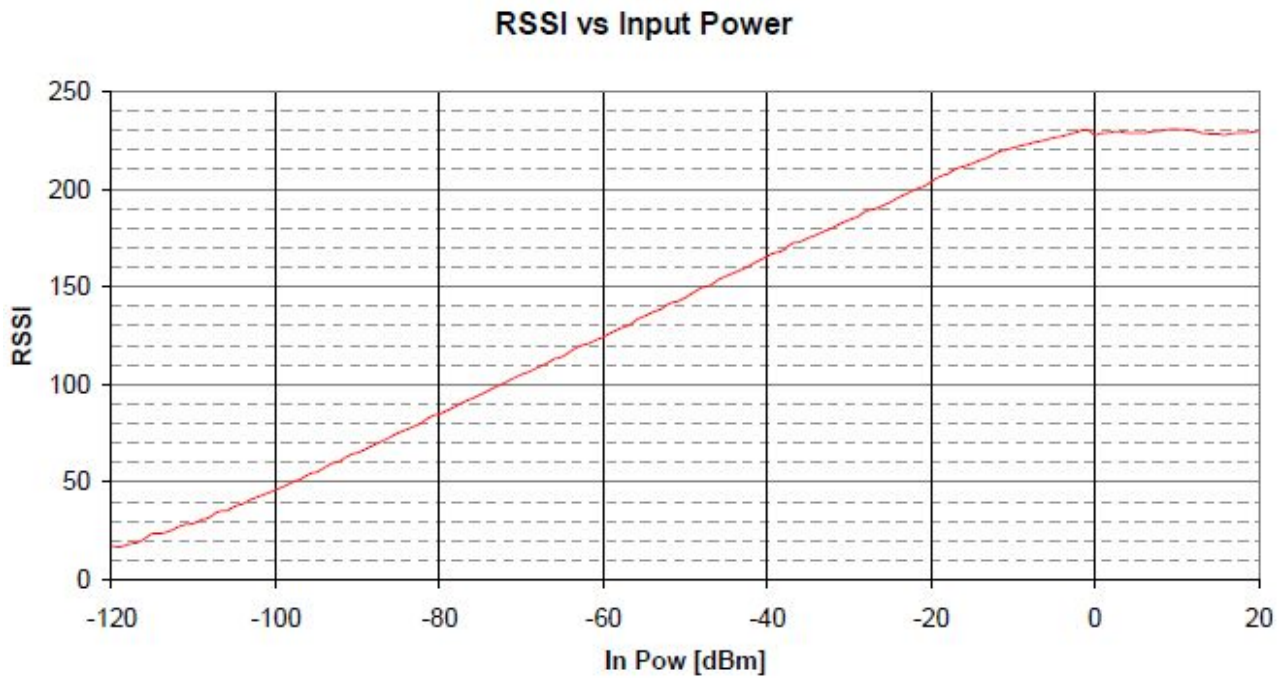

7. Typical connections:

The typical schematic circuit is as below:

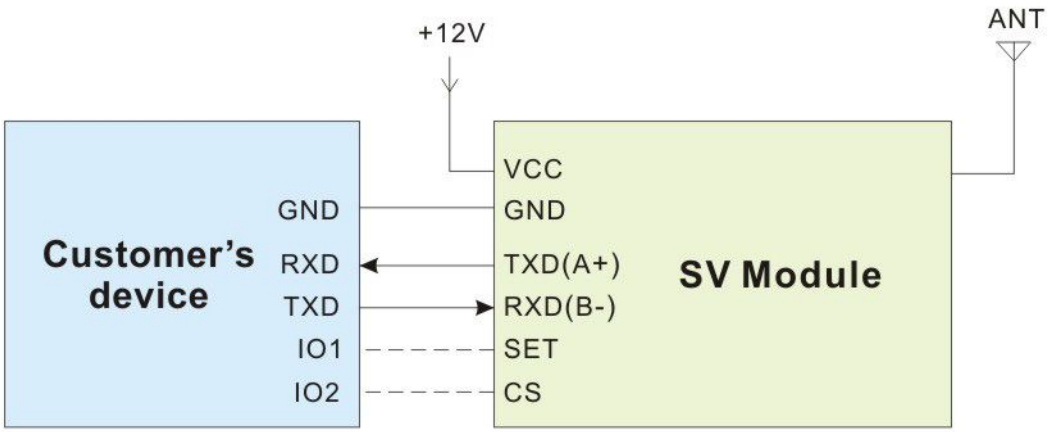

Note:

1)When worked with TTL or RS232 interface, the serial port of modules should cross match with the serial port of customer's device(TXD(A+) to RXD, RXD(B-) to TXD).

2) For RS485 interface, the serial port of module match the serial port of customer's device(A to A, B to B)

3) The ground pin of the module and device should be connected together

Typical connection as below：

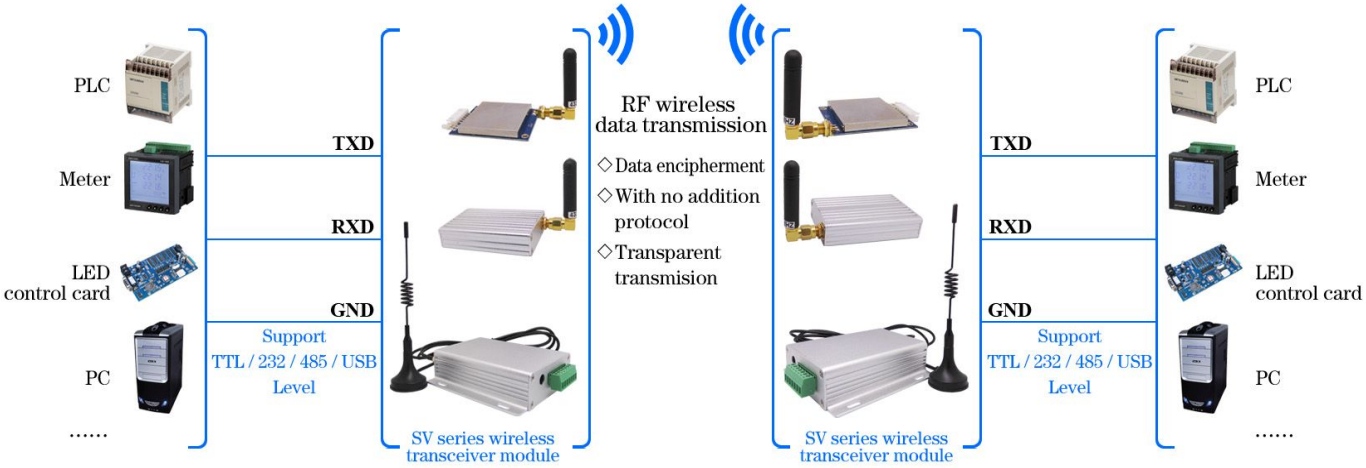

8. Pin Definition:

➢ **610**

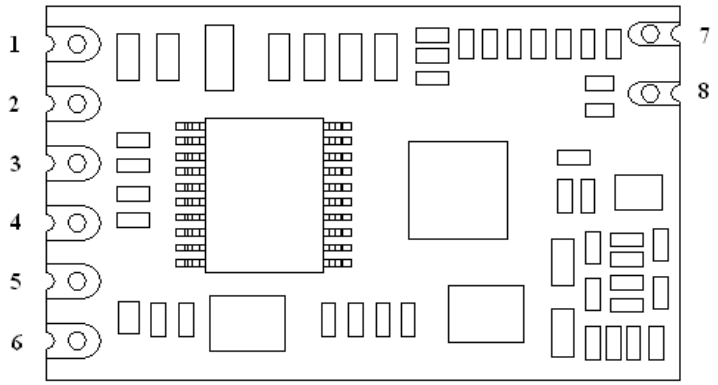

Pin No.	Definition	Description
1	VCC	Connected to the positive power supply (typical 5V)
2	GND	Connected to ground
3	TXD	TXD of the module and connect to external RXD
4	RXD	RXD of the module and connect to external TXD
5	SET	Configuration mode enable (low to enter into the setting mode, leave open or connect high level to exit setting mode) Valid when CS Pin is high or leave open.
6	CS	Module working Enable（Pull Low to make the module enter into sleep mode, Leave open or connect high level make the module enter into normal working mode）
7	GND	Connected to ground
8	ANT	Connected with antenna（50ohm copper coaxial antenna）

➢ 650：

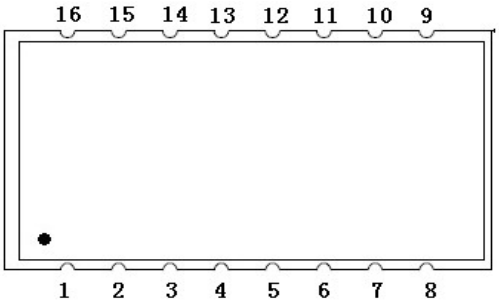

Pin No.	Definition	Description
1	SET	Configuration mode enable (low to enter into the setting mode, leave open or connect high level to exit setting mode) Valid when CS Pin is high or leave open.
2	CS	Module working Enable（Pull Low to make the module enter into sleep mode, Leave open or connect high level make the module enter into normal working mode）
3	TXLED	LED Indicator for transmission（active when low level）
4	RXLED	LED Indicator for reception（active when low level）
5、6、7、11、12	NC	null
8、10、13	GND	Connected to ground
9	ANT	Connected with antenna（50ohm copper coaxial antenna）
14	VCC	Connected to the positive power supply (typical 5V)
15	RXD/B	RXD of the module and connect to external TXD (@485 level, connect with B to output)
16	TXD/A	TXD of the module and connect to external RXD (@485 level, connect with A to output)

➢ 611、651 series：

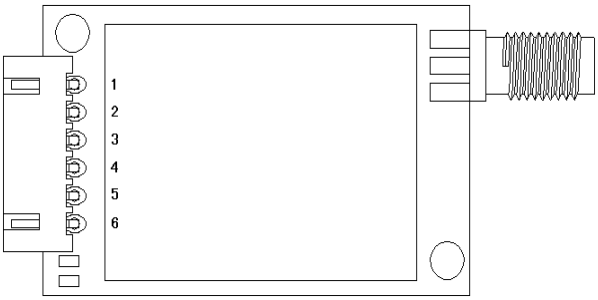

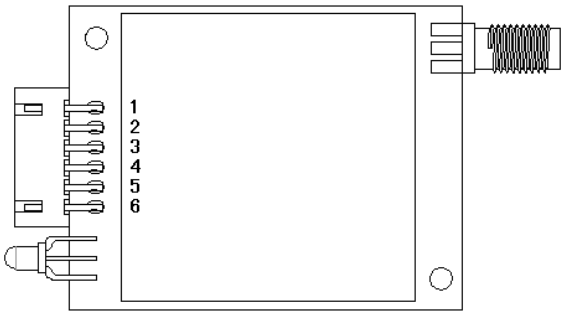

Pin No.	Definition	Description
1	VCC	Connected to the positive power supply (typical 5V)
2	GND	Connected to ground
3	TXD/A	TXD of the module and connect to external RXD (@485 level, connect with A to output)
4	RXD/B	RXD of the module and connect to external TXD (@485 level, connect with B to output)
5	SET	Configuration mode enable (low to enter into the setting mode, leave open or connect high level to exit setting mode) Valid when CS Pin is high or leave open.
6	CS	Module working Enable（Pull Low to make the module enter into sleep mode, Leave open or connect high level make the module enter into normal working mode）

➢ 612、652、6202 series：

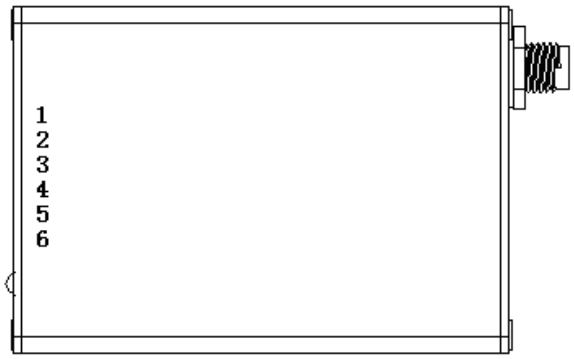

Pin No.	Definition	Description
1	VCC	Connected to the positive power supply (typical 5V)
2	GND	Connected to ground
3	TXD/A	TXD of the module and connect to external RXD (@485 level, connect with A to output)
4	RXD/B	RXD of the module and connect to external TXD (@485 level, connect with B to output)
5	SET	Configuration mode enable (low to enter into the setting mode, leave open or connect high level to exit setting mode) Valid when CS Pin is high or leave open.
6	CS	Module working Enable（Pull Low to make the module enter into sleep mode, Leave open or connect high level make the module enter into normal working mode）

- **613、653 series :**

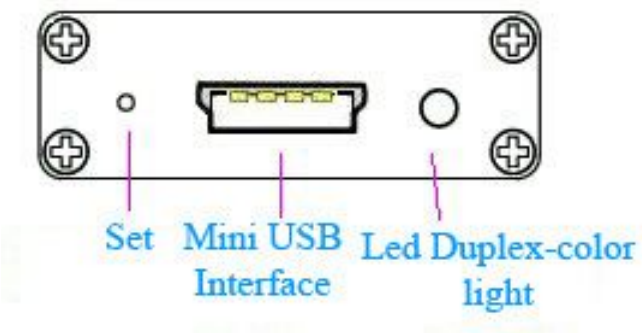

- **614、654 series :**

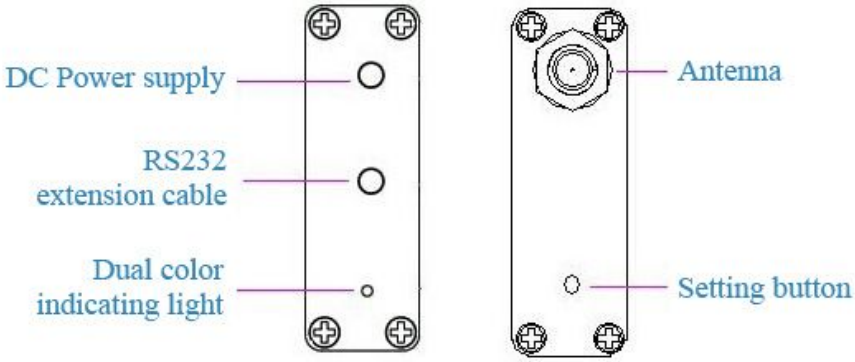

- **6300、6500 series :**

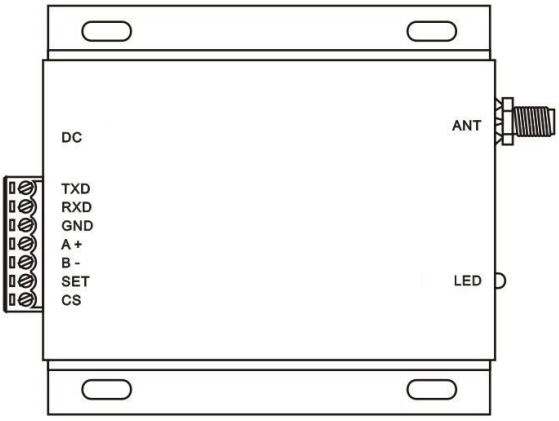

Pin No.	Definition	Description
1	TXD	TXD of the module and connect to external RXD
2	RXD	RXD of the module and connect to external TXD
3	GND	Connected to ground
4	A +	Serial communication TXD (RS485 Level)
5	B -	Serial communication RXD (RS485 Level)
6	SET	Configuration mode enable (low to enter into the setting mode, leave open or connect high level to exit setting mode) Valid when CS Pin is high or leave open.
7	CS	Module working Enable（Pull Low to make the module enter into sleep mode, Leave open or connect high level make the module enter into normal working mode）

9. Accessories:

1. Antenna

antenna is very important for RF communication, its performance will affect the communication directly. Module needs antenna in 50ohm. Common antenna has rubber straight/ elbow/ foldable rod and sucker antenna and etc. Users can order accordingly. To ensure module in the best performance, we suggest to use the our antenna

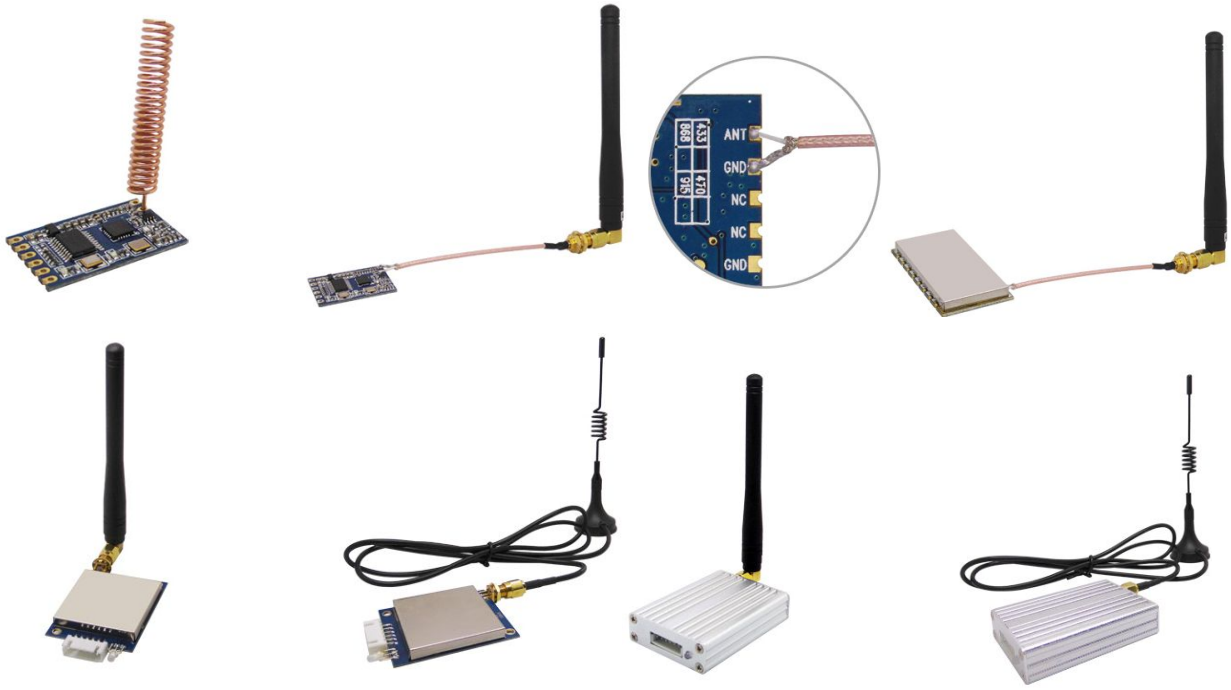

★To ensure modules get the best performance, user must obey the following principles when using the antennas：

- Put the antenna away from the ground and obstacles as possible as you could；
- If you choose the sucker antenna, pull straight the lead wire as possible as it can be, the sucker under arches should be attached on the metal object.

2. USB bridge board

There are 3 type of USB bridge, which is SU108-TTL/ SU108-232 / SU108-485.SU108 -TTL is for TTL Interface, SU108-232 is for 232 Interface, SU108 - 485 is for 485 Interface. User should select the right USB bridge corresponding to the RF module.

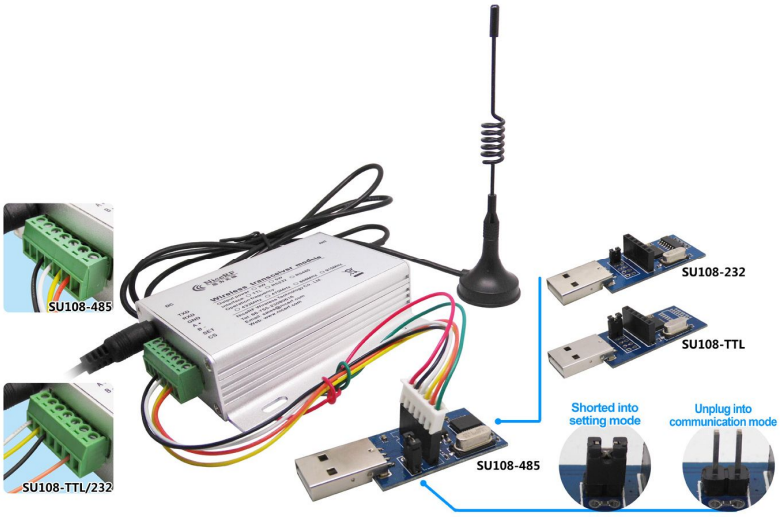

Note: If the output power of module is 2W or higher, it require external power supply when the modules working.

10. Mechanical Dimensions:

➢ 610 Dimensions:

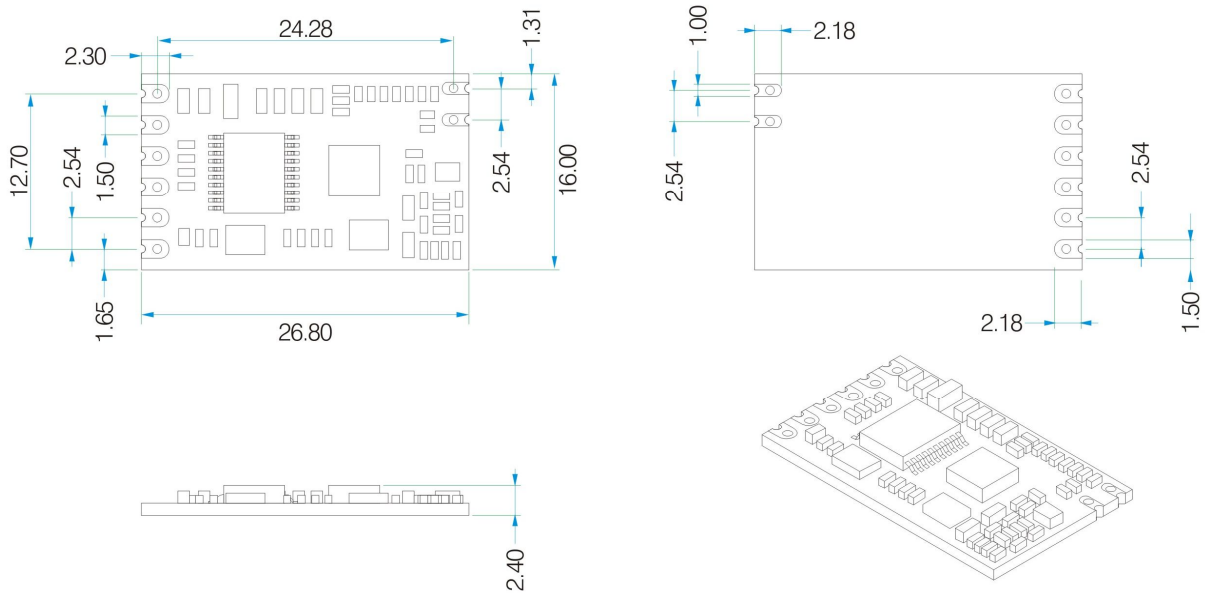

➢ 611 Dimensions:

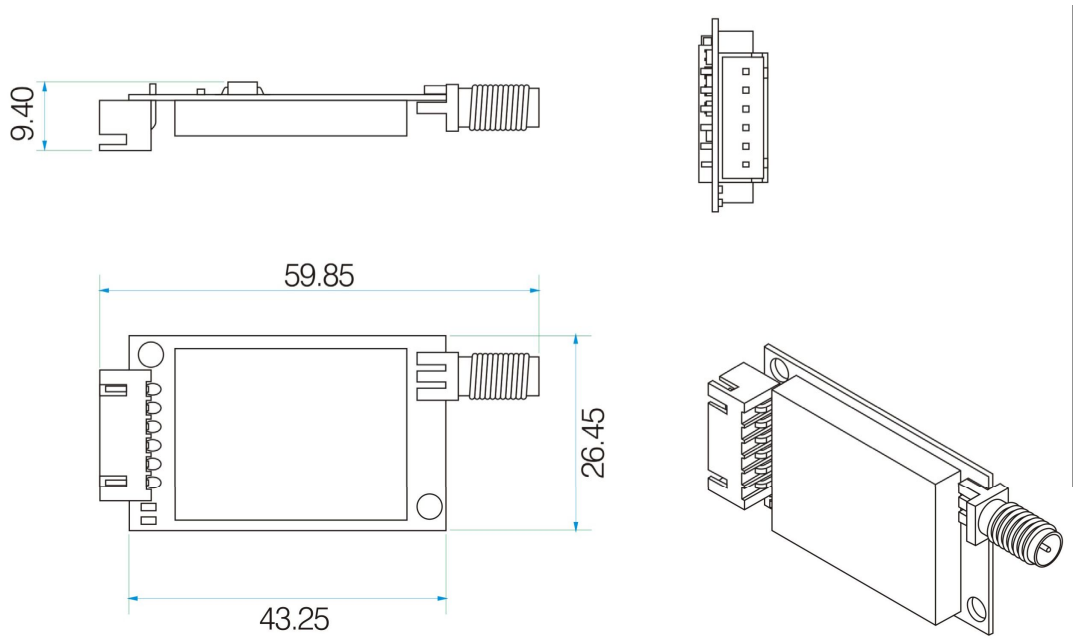

- **650 Dimensions:**

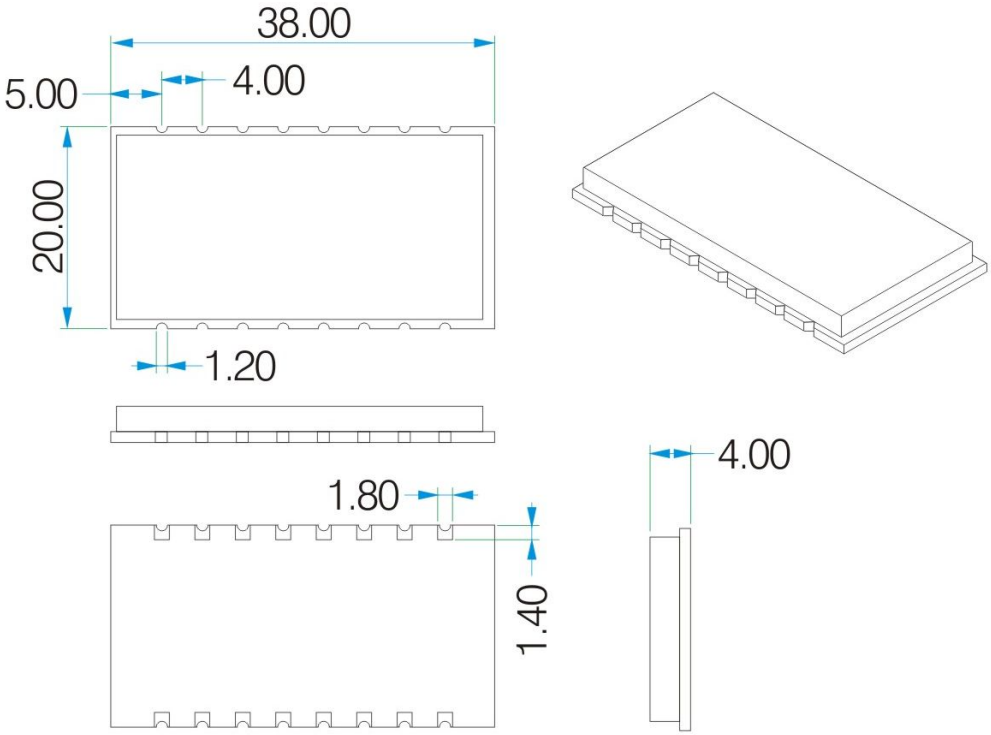

- **651 Dimensions:**

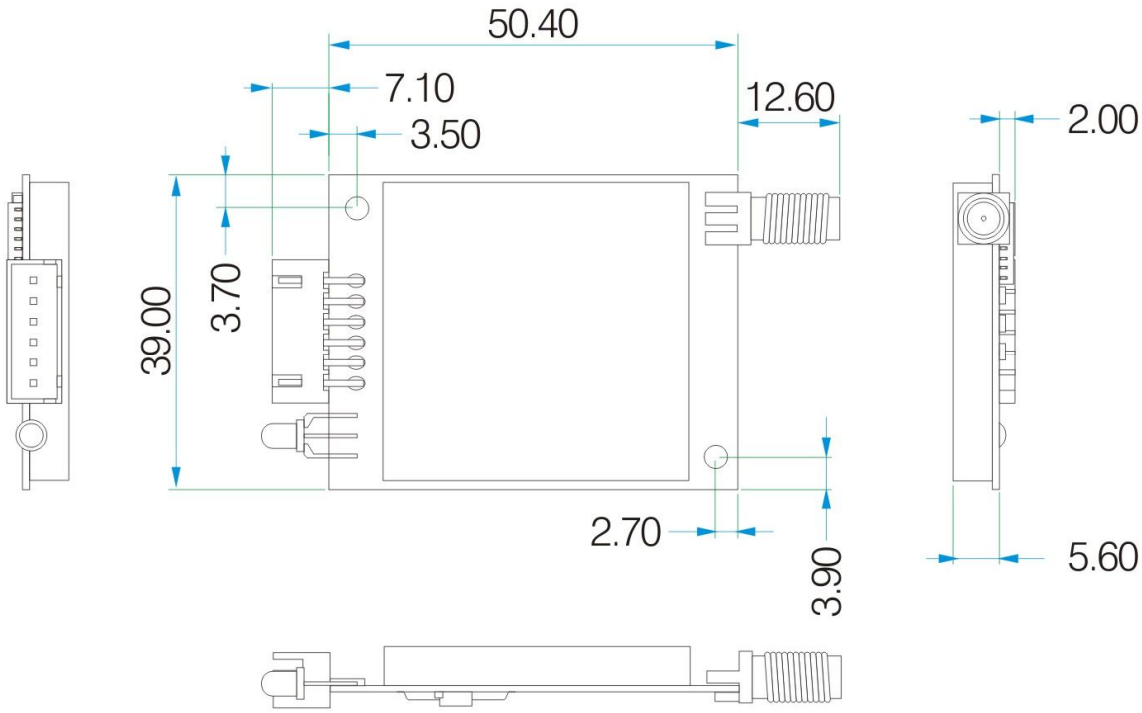

➢ 612、652、6202 Dimensions:

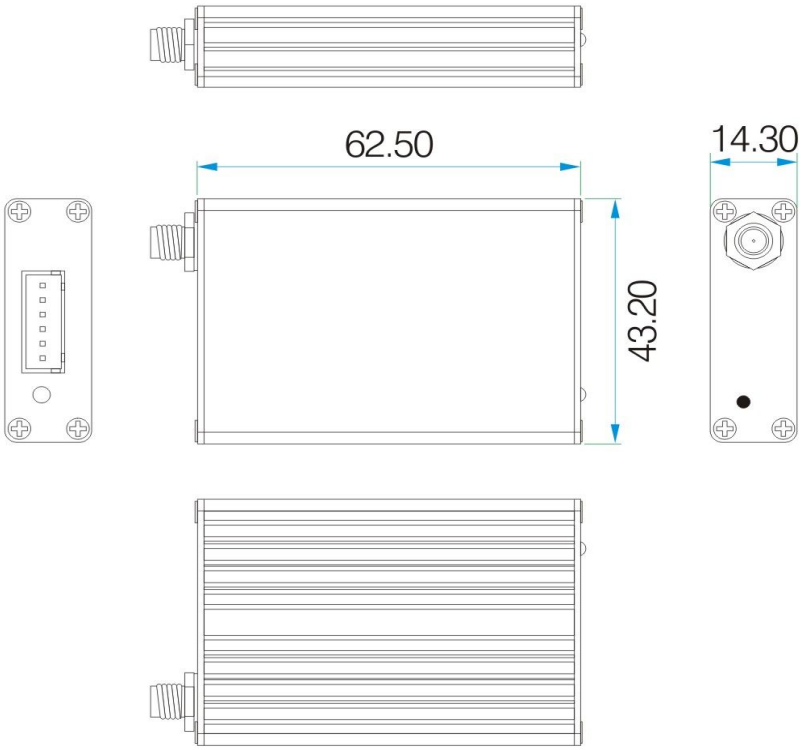

➢ 6300、6500 Dimensions:

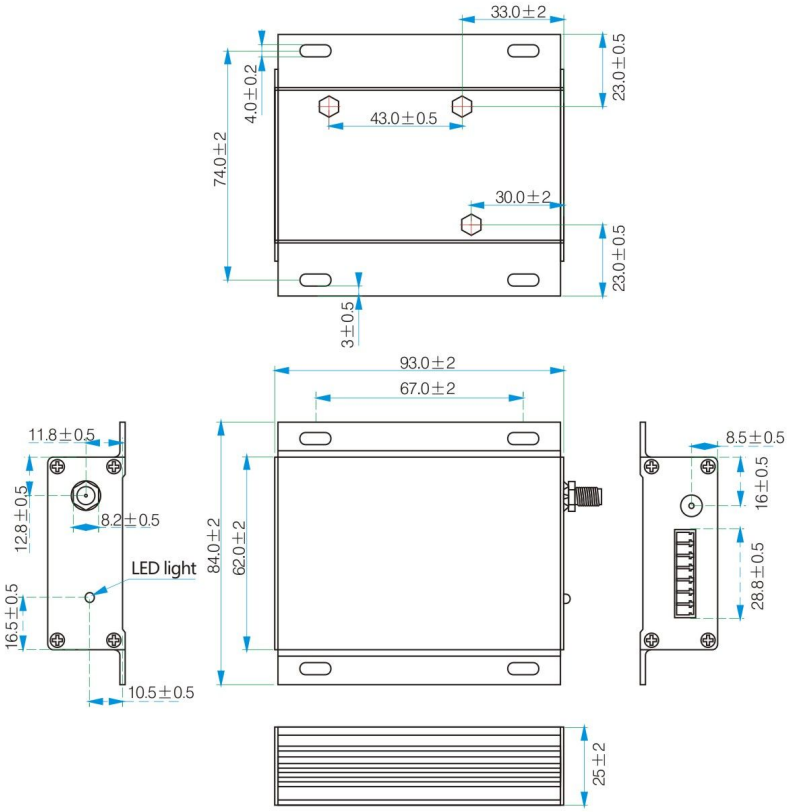

11. Order information:

For example: If the customer needs 5W 433MHz band with TTL port, then the part number of released order shall be: SV6500-MESH-TTL-433

- SV-MESH series:

Note: SV-MESH series are same as our SV series modules in hardware. It has different output power and different interface for option.

Product Name	Power	Interface	Picture
SV610-MESH	100mW	TTL	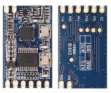
SV611-MESH	100mW	TTL/RS232/RS485	
SV612-MESH	100mW	TTL/RS232/RS485	
SV613-MESH	100mW	USB	
SV614-MESH	100mW	RS232	
SV650-MESH	500mW	TTL /RS485	
SV651-MESH	500mW	TTL/RS232/RS485	
SV652-MESH	500mW	TTL/RS232/RS485	
SV653-MESH	500mW	USB	
SV654-MESH	500mW	RS232	
SV6202-MESH	2W	TTL/RS232/RS485	

SV6300-MESH	3W	TTL/RS232/RS485	
SV6500-MESH	5W	TTL/RS232/RS485	

12. FAQ:

A. Why module can not communicate properly?

1) Check if there is power connection error;

2) Check if the module is enabled (CS / SET both high);

3) Check if the band, channel, rate, NET ID has set to the same;

4) Check if the module is damaged(light is on?)

B. Why transmission distance is not far as it should be?

1) Power supply ripple is too large;

2) The antenna types do not match, or not properly installed;

3) The surrounding environment is harsh, strong interference sources;

4) Surrounding co-channel interference;

C. Why receiving data incorrect?

1) Check if the interface compatible with the device;

2) Improper parameter settings.

3) Module data interface is bad.