G-NiceRF®

RF2401F20

2.4G Wireless Transceiver Module

CE FCC IC TELEC Certificated

Product Specification

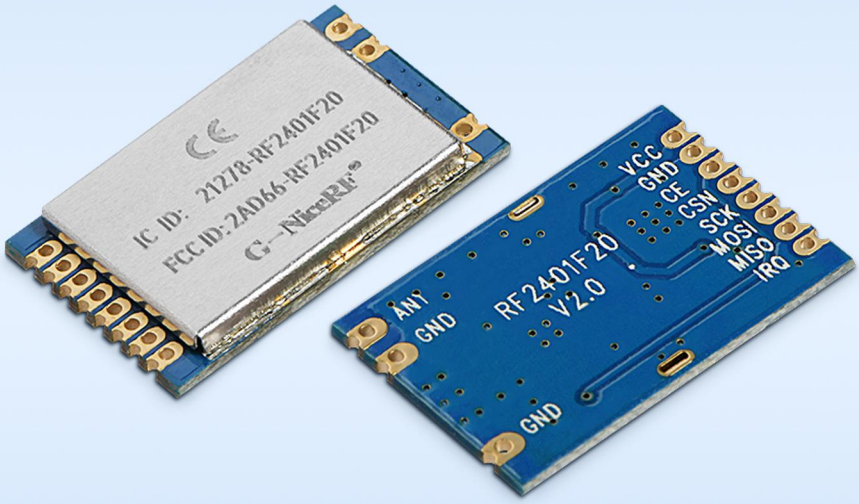

Catalogue

1. Overview....3
2. Features....3
3. Applications....3
4. Typical application circuit....3
5. Electrical Characteristics....4
6. Pin definition....5
7. Communication Antenna....6
8. Mechanical size (unit：mm)....6
Appendix 1:Demo Board....7
Appendix 2:SMD Reflow Chart....9
We recommend you should obey the IPC related standards in setting the reflo profile:....9

Note: Revision History

Revision	Date	Comment
V1.0	2014-9-5	First release
V2.0	2016-5-5	Modify some parameters
V2.1	2016-9	Modify size
V2.2	2017-11	Add LAYOUT notes
V2.3	2018-12-22	Pin definition correction
V2.4	2019-9	Size correction
V2.5	2020-2-26	Modified notes
V3.0	2020-11	Modify description
V3.1	2022-4	Add TELEC certification

1. Overview

Our RF2401F20 module uses the original imported nRF24L01+ device from NORDIC, which is a highly integrated 2.4GHz wireless ISM band wireless transceiver chip. The extremely low sensitivity (-102 dBm), coupled with the industry-leading output power of +20dBm, ensures extended range and improved link performance.

RF2401F20 uses lead-free process for production and testing strictly, and meets RoHS and Reach standards. RF2401F20 has obtained many certifications such as CE, FCC, IC, TELEC and ROHS.

Module	ROHS	CE	FCC	IC	TELEC	Shield
RF2401F20	Yes	Yes	Yes	Yes	Yes	Yes

2. Features

- Frequency Range:2400-2525MHz
- Maximum output power:20dBm
- Sensitivity up to-102dBm@250Kbps
- Data transfer rate:250K,1Mbps,2Mbps
- GFSK modulation,126 channels
- Data packet communication mode (transceive FiFo 3-32 bytes)
- Ultra-low consumption shutdown mode
- Support FM function
- Timed wake-up function
- Integrated voltage regulator
- Operating voltage range：1.9-3.6 V
- Operating Temperature Range: -40~+85 °C

3. Applications

- wireless remote
- Smart home
- Toys control
- Tire pressure monitoring
- Health monitoring
- Tag reading and writing

4. Typical application circuit

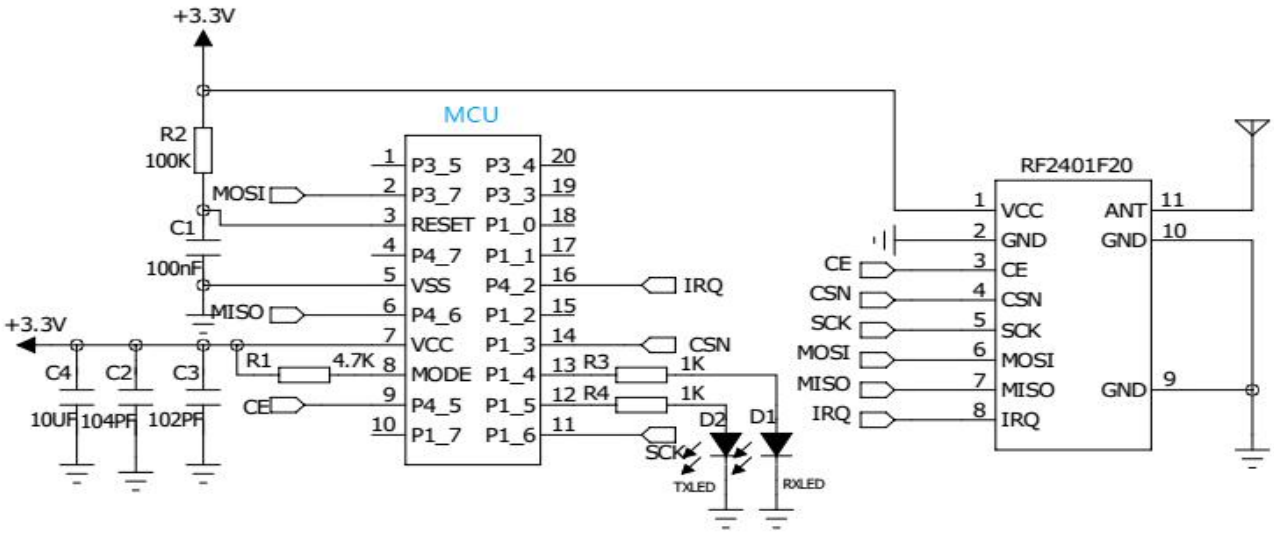

5. Electrical Characteristics

★ The following parameters are obtained by connecting the instrument with a 50 ohm copper axis @VCC= 3.3V

Parameter	Min.	Typ.	Max.	Unit	Condition
Operation Conditions					
Working voltage range	1.9	3.3	3.6	V	
Temperature voltage	-40		85	℃	
Current Consumption					
RX current		23.5	24	mA	
TX current		135	150	mA	@20dBm
Sleep current		<1		uA	
RF Parameter					
Frequency range	2400		2525	MHz	
Data rate	250		2000	Kbps	GFSK
Output power	4		20	dBm	Power 0=5dBm, 3=20dBm
Maximum transmit power	18.5	20		dBm	
Receiving sensitivity	-100	-102		dBm	@data=250kbps

6. Pin definition

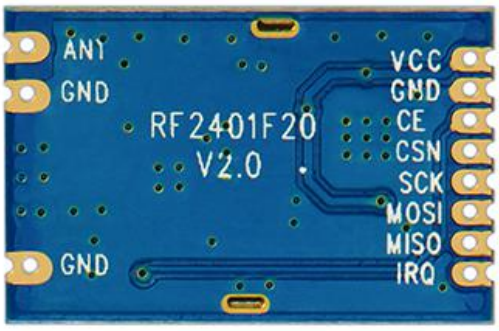

Pin NO.	Pin name	Description
1	VCC	Positive power supply（1.9-3.6V）
2	GND	Connect the negative pole of the power supply
3	CE	Chip select to enable transmission or reception
4	CSN	SPI chip select
5	SCK	Serial clock for SPI interface
6	MOSI	SPI slave data input
7	MISO	SPI slave data output
8	IRQ	Programmable interrupt pin, active low
9	GND	Connect the negative pole of the power supply
10	GND	Connect the negative pole of the power supply
11	ANT	Connect with 50 ohm coaxial antenna

Note:

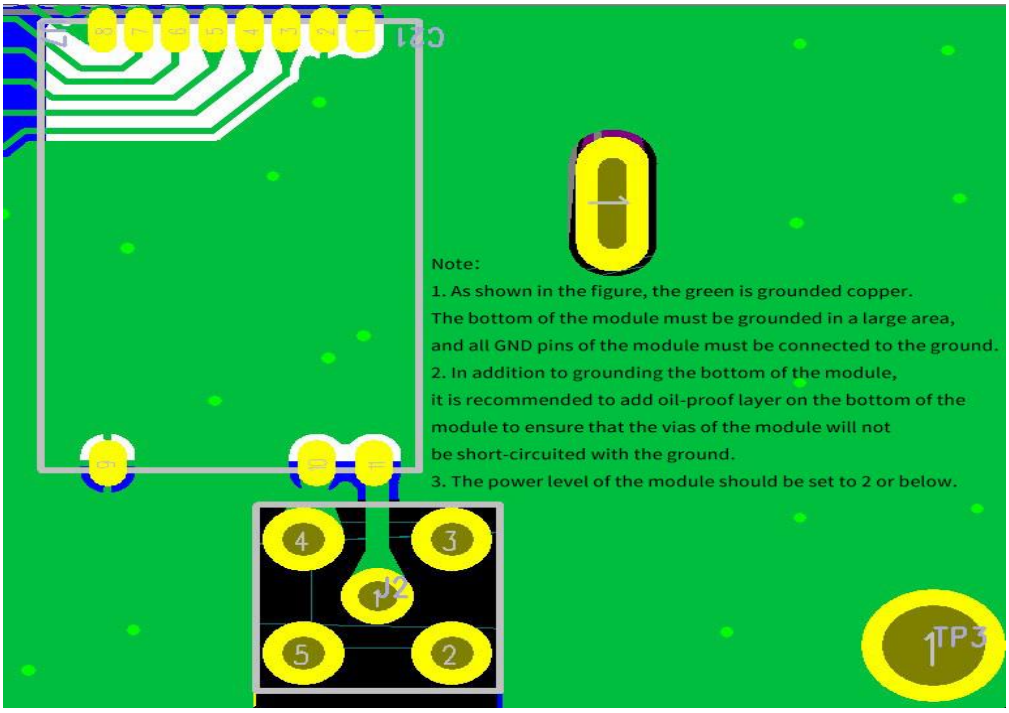

7. Communication Antenna

Antenna is very important for RF communication, its performance will affect the communication directly. Module needs antenna in 50ohm.SMA can also be used to transfer straight/elbow/folded rod. Users can order accordingly. To ensure module in the best performance, we suggest to use the our antenna.

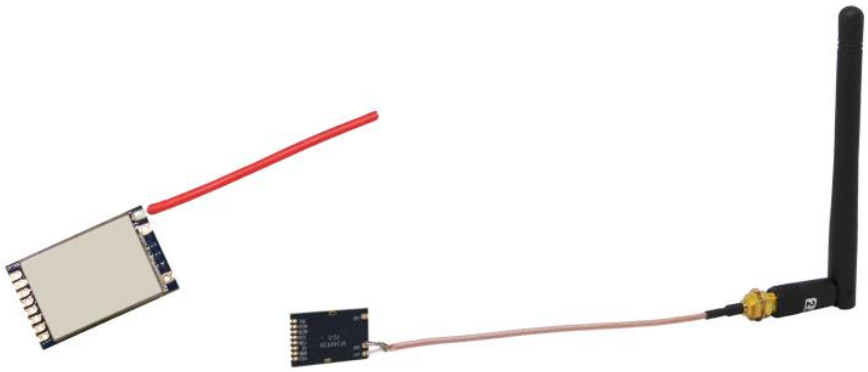

★ To ensure modules get the best performance, user must obey the following principles when using the antennas：

- Put the antenna away from the ground and obstacles as possible as you could；
- If you choose the sucker antenna, pull straight the lead wire as possible as it can be, the sucker under arches should be attached on the metal object.

8. Mechanical size (unit： mm)

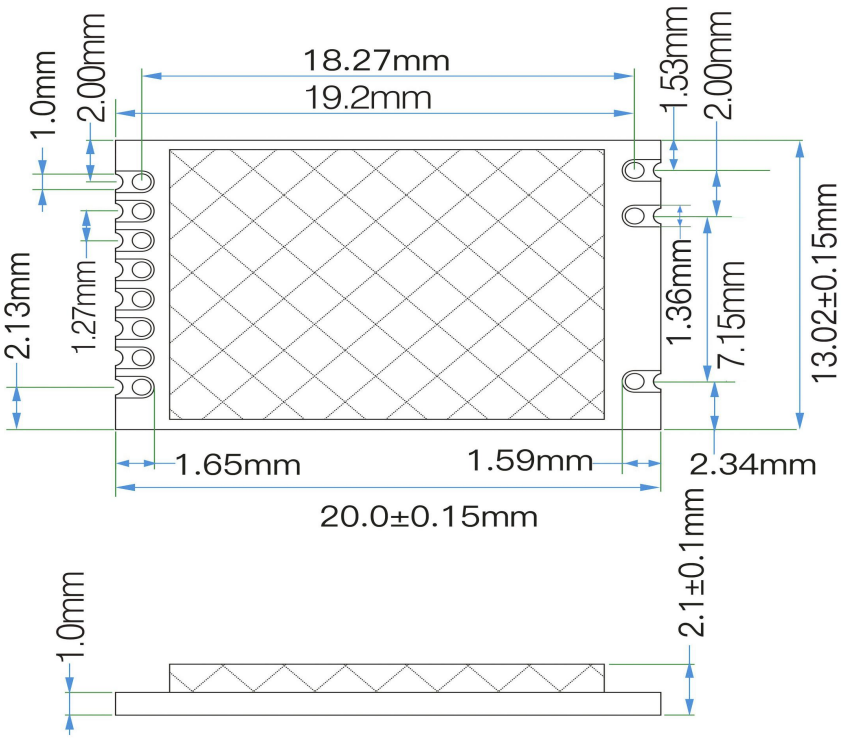

Appendix 1:Demo Board

The module is equipped with a standard DEMO board for customer to debug the program and test distance. It shows as below:

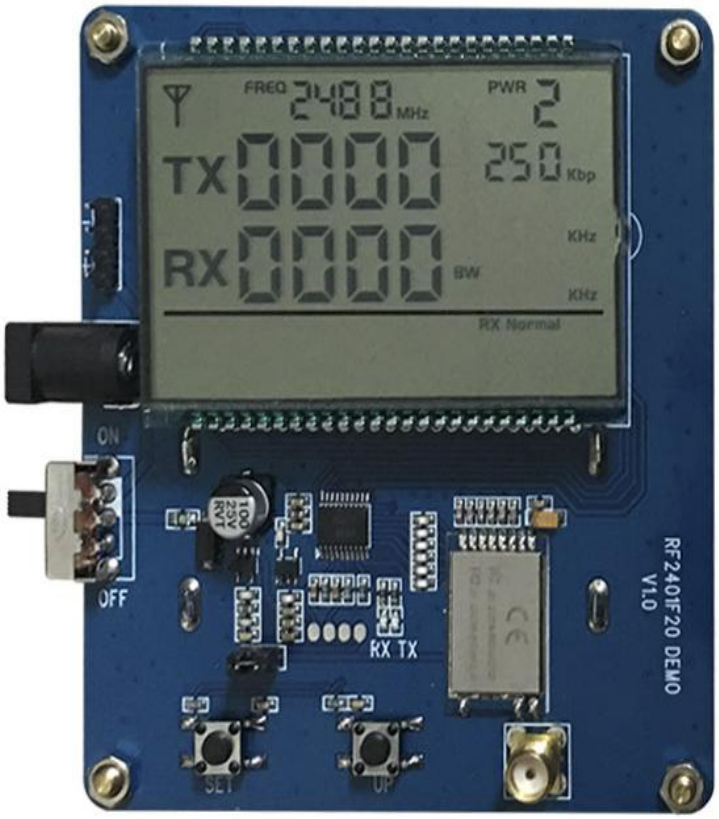

The LCD Full Segment is as below:

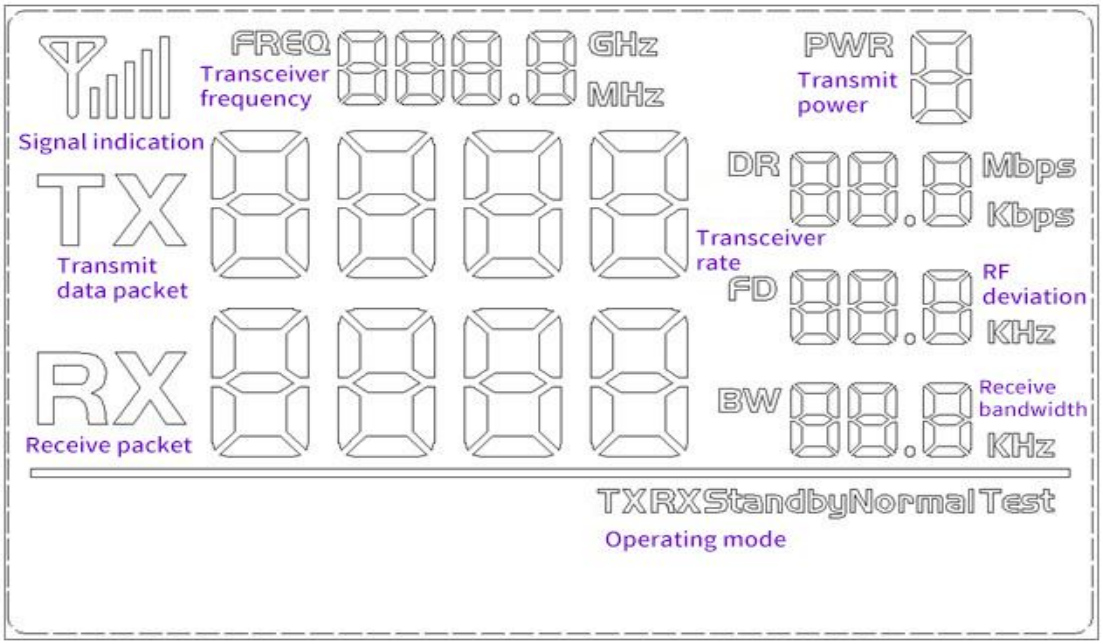

The users can set the parameters of the RF module such as frequency /transmitter power / transmission data rate through the buttons.

- **Working Mode:**

1) Tx normal mode: send data packets regularly (In the setting mode, data packets will not be sent);
2) Rx normal mode: Power on and enter the receive state, receive data packets, and then send out the correctly received data packets;
3) Tx Test Mode: RF module continuously transmit signal;
4) Rx Test Mode: RF module is always in Rx mode;
5) Standby Mode: RF module is always in standby state.

- **Button Operation：**

1) [SET] Button

Press the key to enter the setting mode. If the last parameter is set, the key will exit the setting mode.

2) UP /Down Button

In setting mode, press to modify the corresponding setting parameters.

Note: The DEMO board has FLASH memory inside, all the setting parameters will behave automatically and keep unchanged even power-off.

Appendix 2:SMD Reflow Chart

We recommend you should obey the IPC related standards in setting the reflo profile:

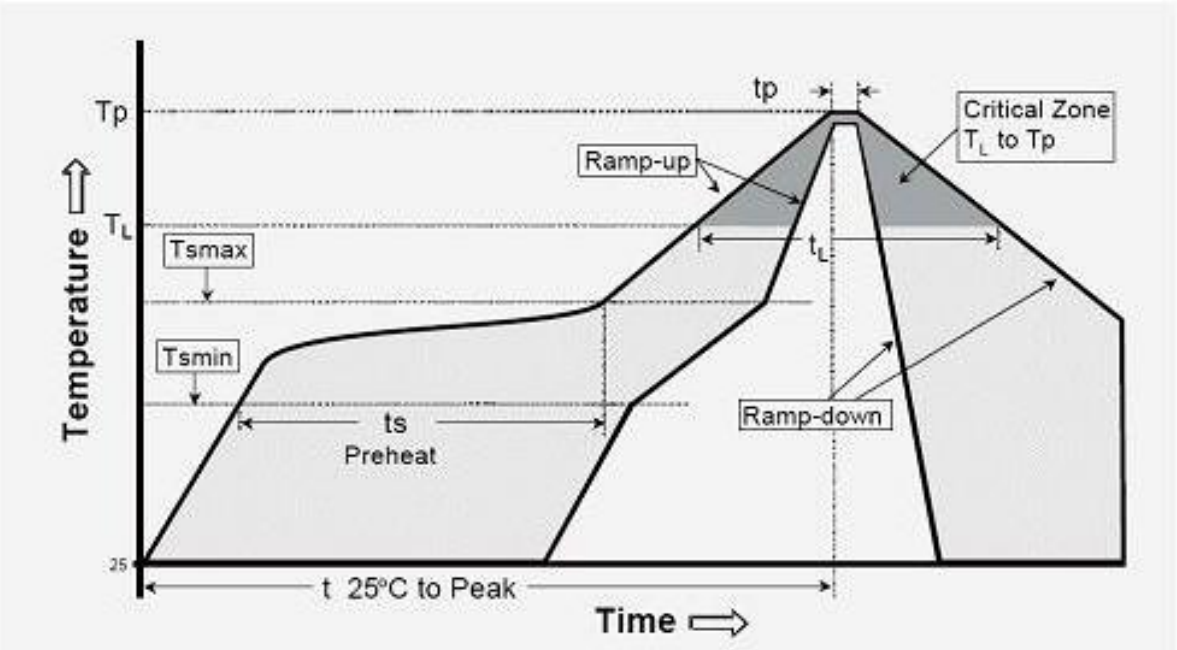

IPC/JEDEC J-STD-020B the condition for lead-free reflow soldering	big size components (thickness >=2.5mm)
The ramp-up rate (Tl to Tp)	3℃/s (max.)
preheat temperature - Temperature minimum (Tsmin) - Temperature maximum (Tsmax) - preheat time (ts)	 150℃ 200℃ 60~180s
Average ramp-up rate(Tsmax to Tp)	3℃/s (Max.)
- Liquidous temperature(TL)	217℃
- Time at liquidous(tL)	60~150 second
peak temperature(Tp)	245+/-5℃