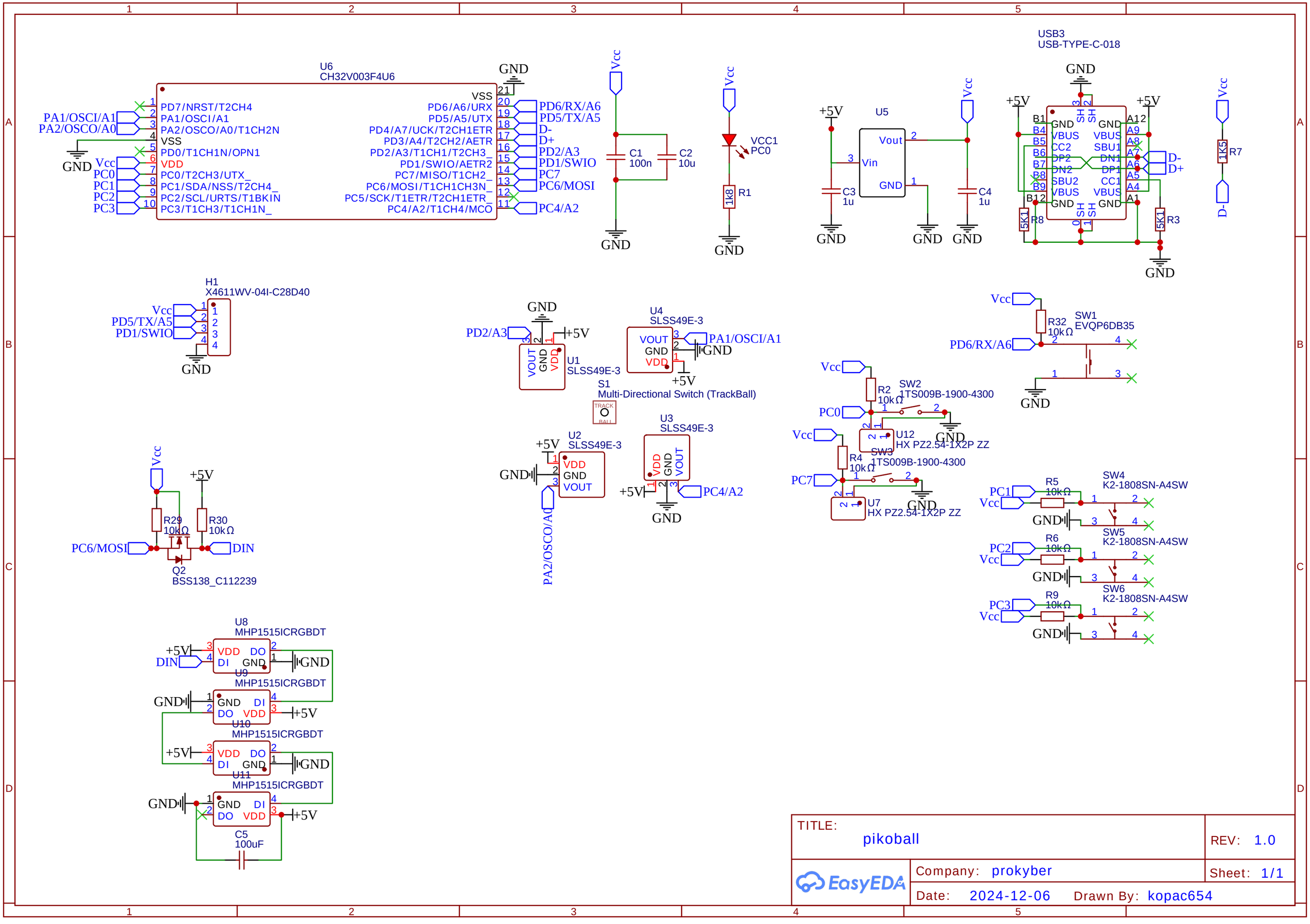
U6
CH32V003F4U6
PD7/NRST/T2CH4
PA1/OSCI/A1
PA2/OSCO/A0/T1CH2N
VSS
PD0/T1CH1N/OPN1
VDD
PC0/T2CH3/UTX_
PC1/SDA/NSS/T2CH4_
PC2/SCL/URTS/T1BKIN
PC3/T1CH3/T1CH1N_
PD6/A6/URX
PD5/A5/UTX
PD4/A7/UCK/T2CH1ETR
PD3/A4/T2CH2/AETR
PD2/A3/T1CH1/T2CH3_
PD1/SWIO/AETR2
PC7/MISO/T1CH2_
PC6/MOSI/T1CH1CH3N_
PC5/SCK/T1ETR/T2CH1ETR_
PC4/A2/T1CH4/MCO
PD6/RX/A6
PD5/TX/A5
D-
D+
PD2/A3
PD1/SWIO
PC7
PC6/MOSI
PC4/A2
C1
100n
C2
10u
VCC1
PC0
R1
1k8
U5
Vout
Vin
GND
C3
1u
C4
1u
USB3
USB-TYPE-C-018
R8
5K1
R3
5K1
R7
1K5
H1
X4611WV-04I-C28D40
U1
SLSS49E-3
U4
SLSS49E-3
PA1/OSCI/A1
S1
Multi-Directional Switch (TrackBall)
U2
SLSS49E-3
U3
SLSS49E-3
PA2/OSCO/A0
R32
10kΩ
SW1
EVQP6DB35
R2
10kΩ
SW2
1TS009B-1900-4300
U12
HX PZ2.54-1X2P ZZ
R4
10kΩ
SW3
1TS009B-1900-4300
U7
HX PZ2.54-1X2P ZZ
R29
10kΩ
R30
10kΩ
Q2
BSS138_C112239
DIN
R5
10kΩ
SW4
K2-1808SN-A4SW
R6
10kΩ
SW5
K2-1808SN-A4SW
R9
10kΩ
SW6
K2-1808SN-A4SW
U8
MHP1515ICRGBDT
U9
MHP1515ICRGBDT
U10
MHP1515ICRGBDT
U11
MHP1515ICRGBDT
C5
100uF
TITLE:
pikoball
REV: 1.0
Company: prokyber
Sheet: 1/1
Date: 2024-12-06
Drawn By: kopac654
EasyEDA