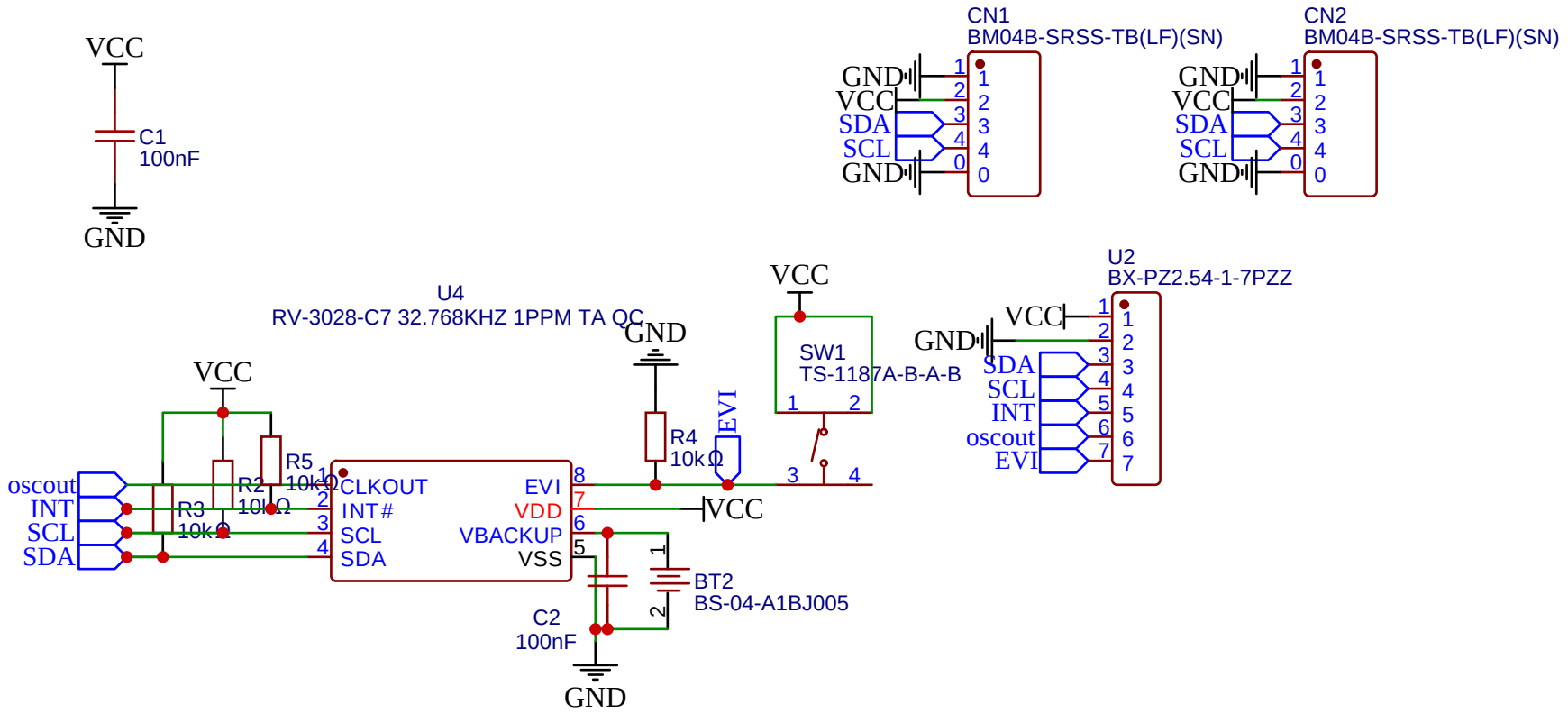

TITLE: PK-RV-3028-C7		REV: 1.0
	Company: Prokyber	Sheet: 1/1
	Date: 2024-09-25 Drawn By: rizecek_1_cz	