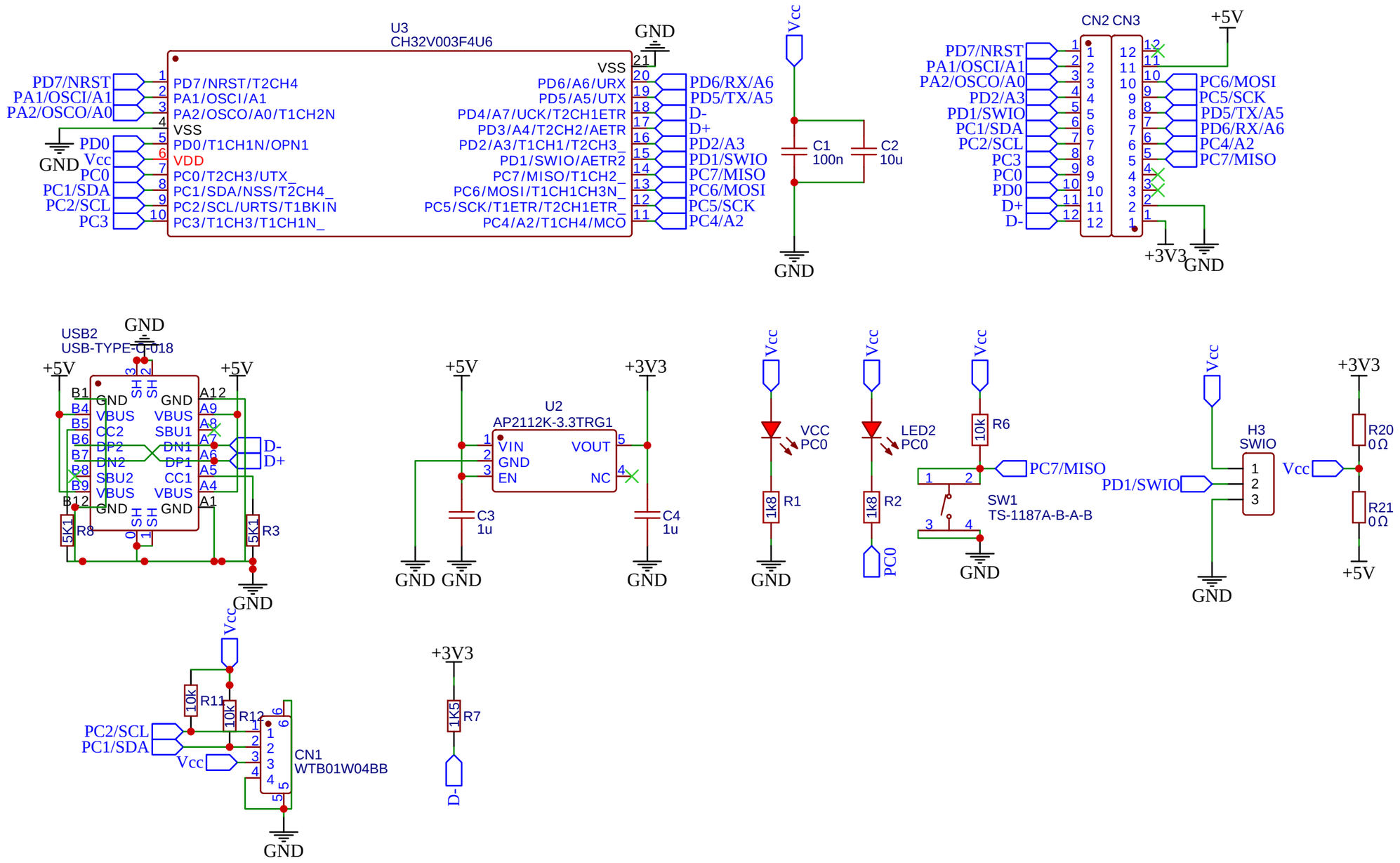

TITLE: Ch32-Ant	REV: 1.0
Company: Prokyber	Sheet: 1/1
Date: 2024-07-16 Drawn By: allexoK	