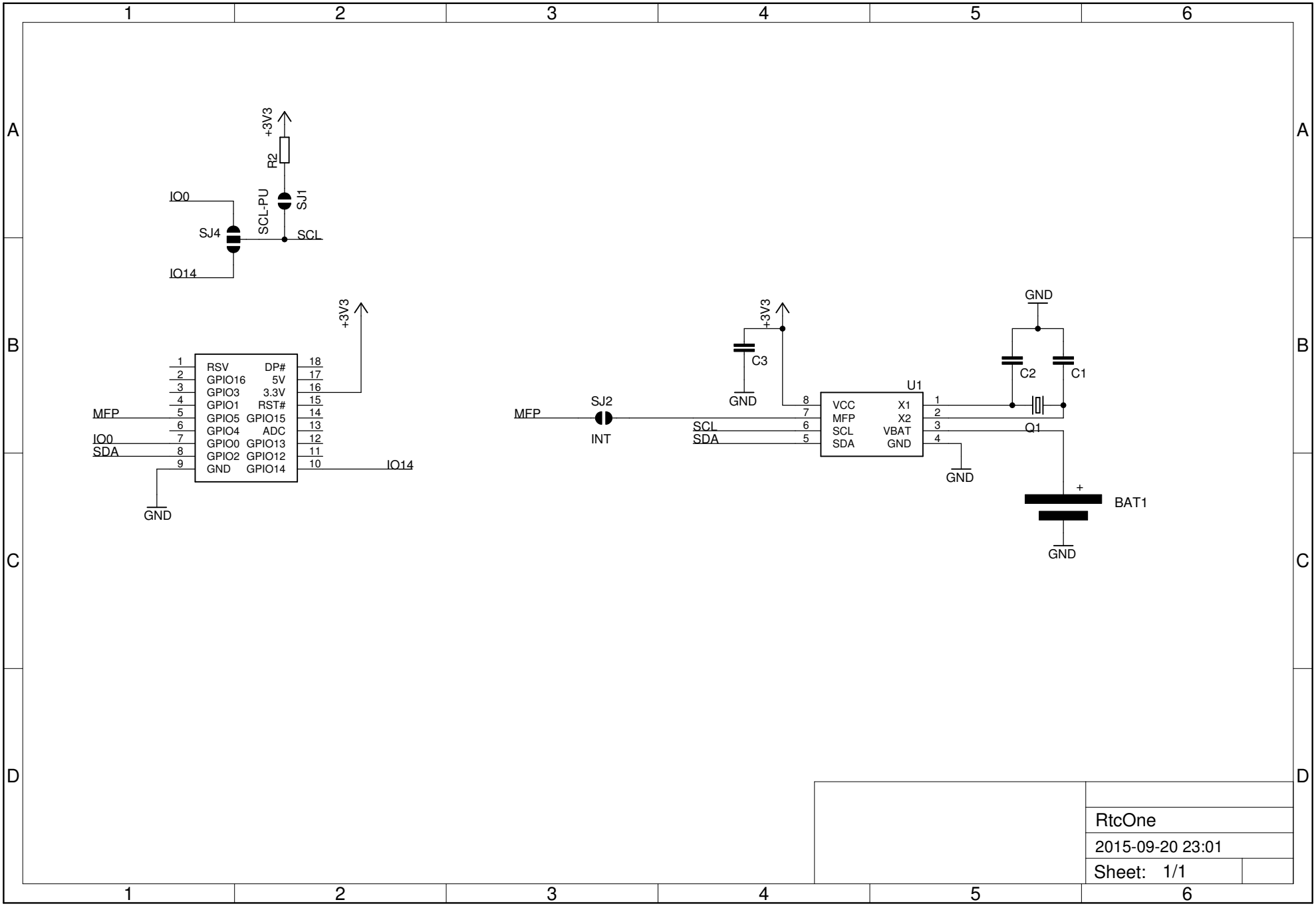

RtcOne

2015-09-20 23:01

Sheet: 1/1