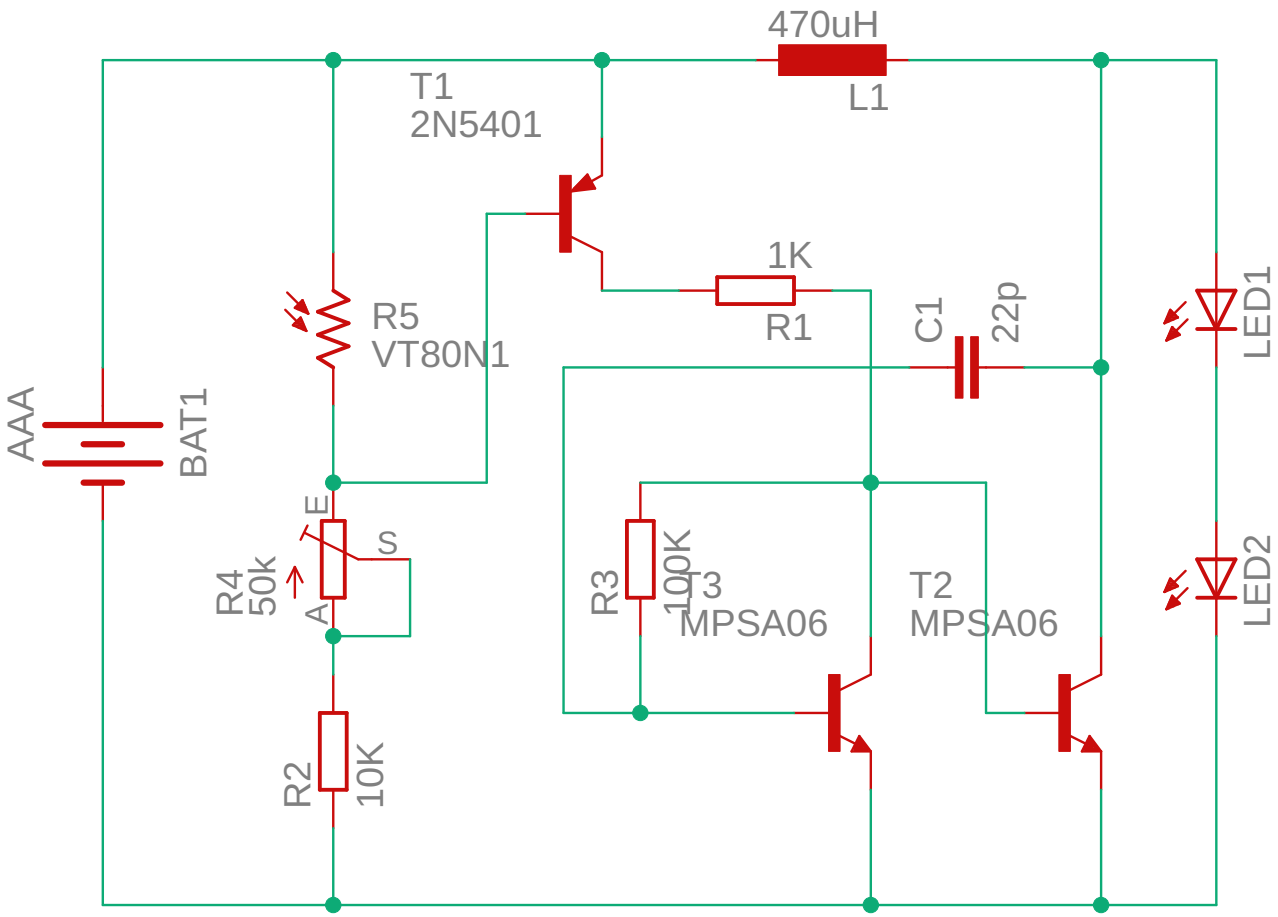
470uH
L1
T1
2N5401
1K
R1
C1
22p
R5
VT80N1
AAA
BAT1
E
S
R4
50k
A
R3
100K
T3
MPSA06
T2
MPSA06
R2
10K
LED1
LED2