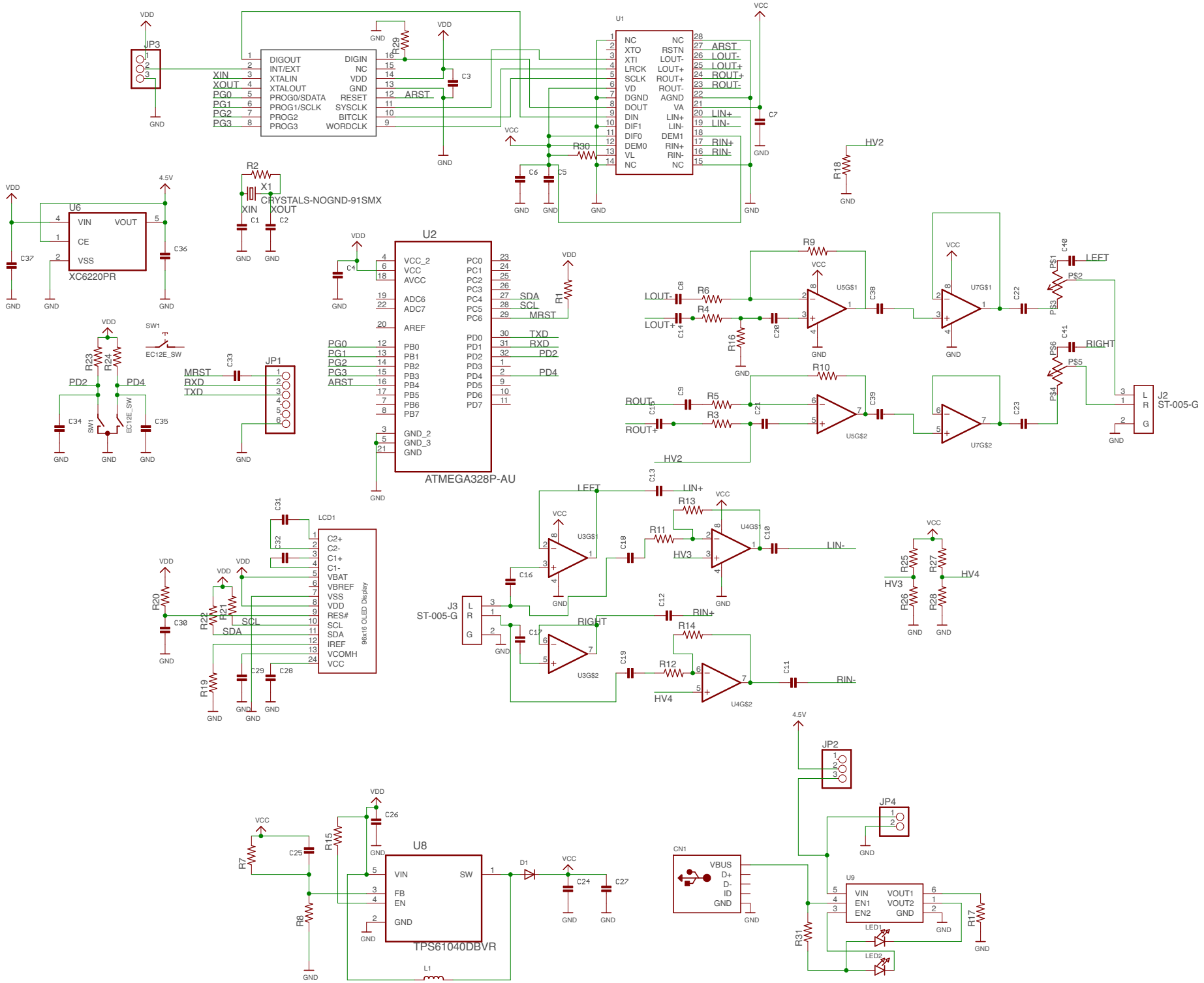
JP3
DIGOUT
INT/EXT
XTALIN
XTALOUT
PROG0/SDATA
PROG1/SCLK
PROG2
PROG3
DIGIN
NC
VDD
GND
RESET
SYSCLK
BITCLK
WORDCLK
XIN
XOUT
PG0
PG1
PG2
PG3
ARST
R29
C3
U1
NC
XTO
XTI
LRCK
SCLK
VD
DGND
DOUT
DIN
DIF1
DIF0
DEM0
VL
RSTN
LOUT-
LOUT+
ROUT+
ROUT-
AGND
VA
LIN+
LIN-
DEM1
RIN+
RIN-
VCC
R30
C6
C5
C7
HV2
R18
U6
VIN
VOUT
CE
VSS
XC6220PR
4.5V
C37
C36
R2
X1
CRYSTALS-NOGND-91SMX
C1
C2
U2
VCC_2
AVCC
ADC6
ADC7
AREF
PB0
PB1
PB2
PB3
PB4
PB5
PB6
PB7
GND_2
GND_3
PC0
PC1
PC2
PC3
PC4
PC5
PC6
PD0
PD1
PD2
PD3
PD4
PD5
PD6
PD7
ATMEGA328P-AU
C4
R1
SDA
SCL
MRST
TXD
RXD
PD2
PD4
R23
R24
SW1
EC12E_SW
C34
C35
JP1
C33
R9
R10
R6
R4
R5
R3
R16
C8
C14
C20
C9
C15
C21
C38
C39
U5G$1
U5G$2
U7G$1
U7G$2
C22
C23
C40
C41
P$1
P$2
P$3
P$4
P$5
P$6
LEFT
RIGHT
J2
ST-005-G
L
R
G
LOUT-
LOUT+
ROUT-
ROUT+
C13
C18
C16
C17
C12
C19
C10
C11
R13
R11
R14
R12
LIN+
LIN-
RIN+
RIN-
HV3
HV4
U3G$1
U3G$2
U4G$1
U4G$2
J3
ST-005-G
LCD1
C31
C32
C2+
C2-
C1+
C1-
VBAT
VBREF
VSS
VDD
RES#
SCL
SDA
IREF
VCOMH
VCC
96x16 OLED Display
R20
R21
R22
R19
C30
C29
C28
R25
R26
R27
R28
JP2
JP4
U8
VIN
FB
EN
GND
SW
TPS61040DBVR
R7
R8
R15
C25
C26
C24
C27
D1
L1
CN1
VBUS
D+
D-
ID
GND
U9
VIN
EN1
EN2
VOUT1
VOUT2
GND
LED1
LED2
R31
R17