Power connector

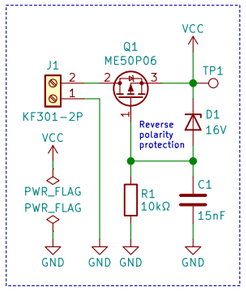

Switched-mode power supply (+5V)

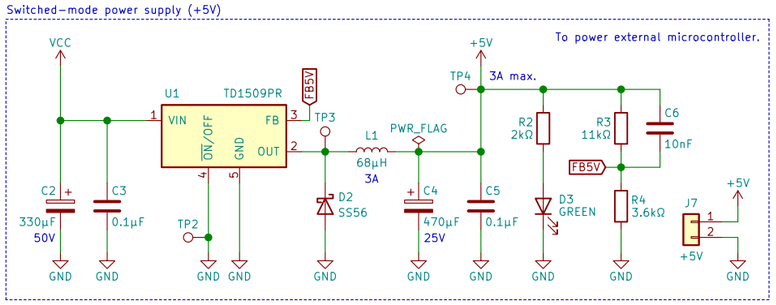

Switched-mode power supply (+12V)

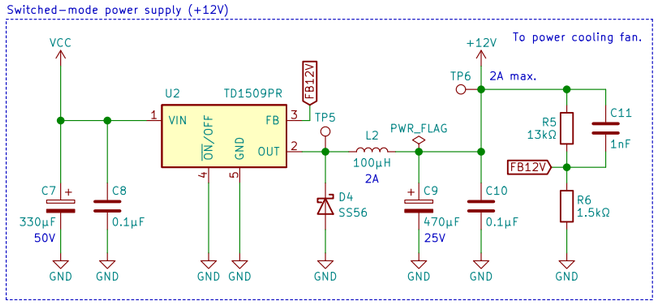

Revision history

1.4.0-1 (2021-01-14):
- new schematic and PCB design in KiCad.
- U1 and U2 replaced with a different DC-DC converter to produce +5V/+12V.
- LED driver killswitch (Q2, Q3 and Q4) separated between channels.
- LM35 temperature sensor replaced with NTC thermistors (internal/external).

LED red-channel constant current driver

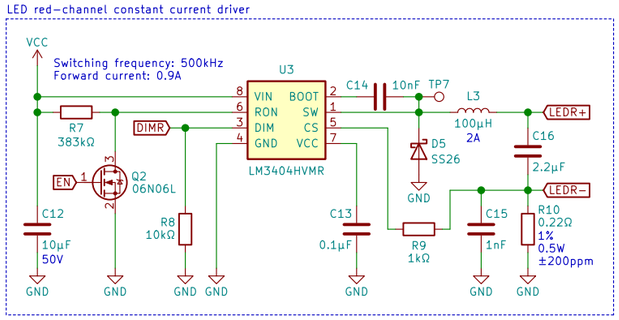

Cooling fan connector (2/3/4-pin)

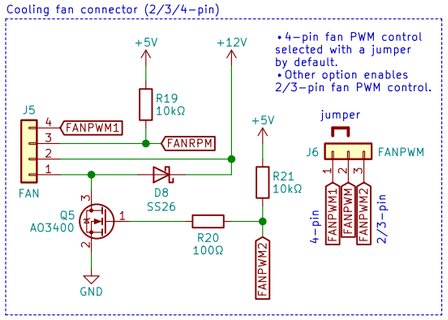

LED green-channel constant current driver

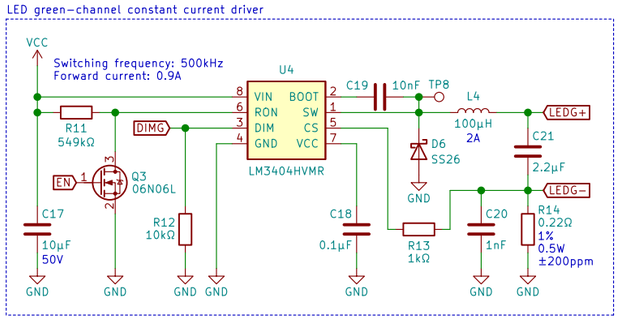

Control pins

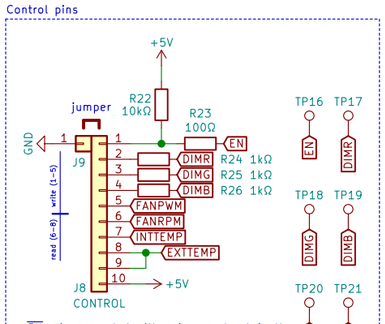

LED blue-channel constant current driver

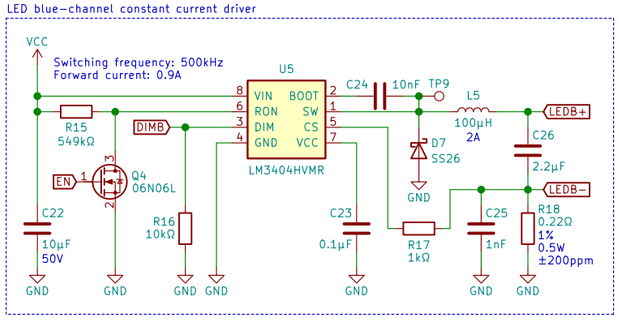

RGB-LED output

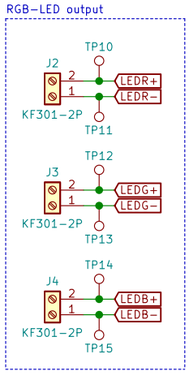

Temperature sensors

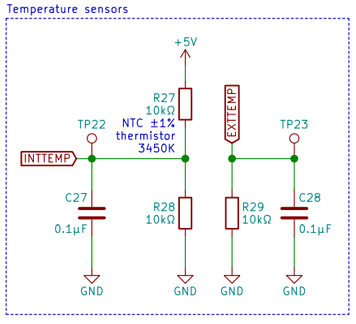

Mounting holes

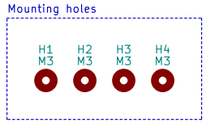

Fiducials

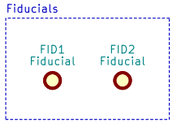

Test points

- TP1: common ground
- TP2: input voltage
- TP3: U1 switching node signal
- TP4: U1 output voltage (+5V)
- TP5: U2 switching node signal
- TP6: U2 output voltage (+12V)
- TP7: U3 switching node signal (red channel)
- TP8: U4 switching node signal (green channel)
- TP9: U5 switching node signal (blue channel)
- TP10: red LED anode voltage
- TP11: red LED cathode voltage
- TP12: green LED anode voltage
- TP13: green LED cathode voltage
- TP14: blue LED anode voltage
- TP15: blue LED cathode voltage
- TP16: LED driver killswitch voltage
- TP17: red LED PWM dimming signal
- TP18: green LED PWM dimming signal
- TP19: blue LED PWM dimming signal
- TP20: cooling fan PWM control signal
- TP21: cooling fan RPM output signal
- TP22: internal NTC thermistor voltage
- TP23: external NTC thermistor voltage

Power supply recommendations

VCC	RGB-LED	Power supply
15V	10W • 0.33A	MW LRS-35-15
24V	20W • 0.33A	MW LRS-50-24
36V	30W • 0.33A	MW LRS-50-36
36V	50W • 0.66A	MW LRS-75-36
40V	100W • 0.9A	MW LRS-150-36

Note that the fixed output voltage of the MW LRS-150-36 power supply is adjustable between 32.4V and 39.6V.

High-Power RGB-LED Driver

P=100W | Vf=22-36V | If=0.9A/channel
Part number: BC-006140-LM3404

Boundary Condition
https://boundarycondition.home.blog/

Sheet: /
File: HighPowerRGBLEDDriver_V140.sch

Author: Daniel Laszlo

Size: A3	Date: 2021-01-14	Rev: 1.4.0-1
KiCad E.D.A. kicad (5.1.8)-1		Page: 1/1