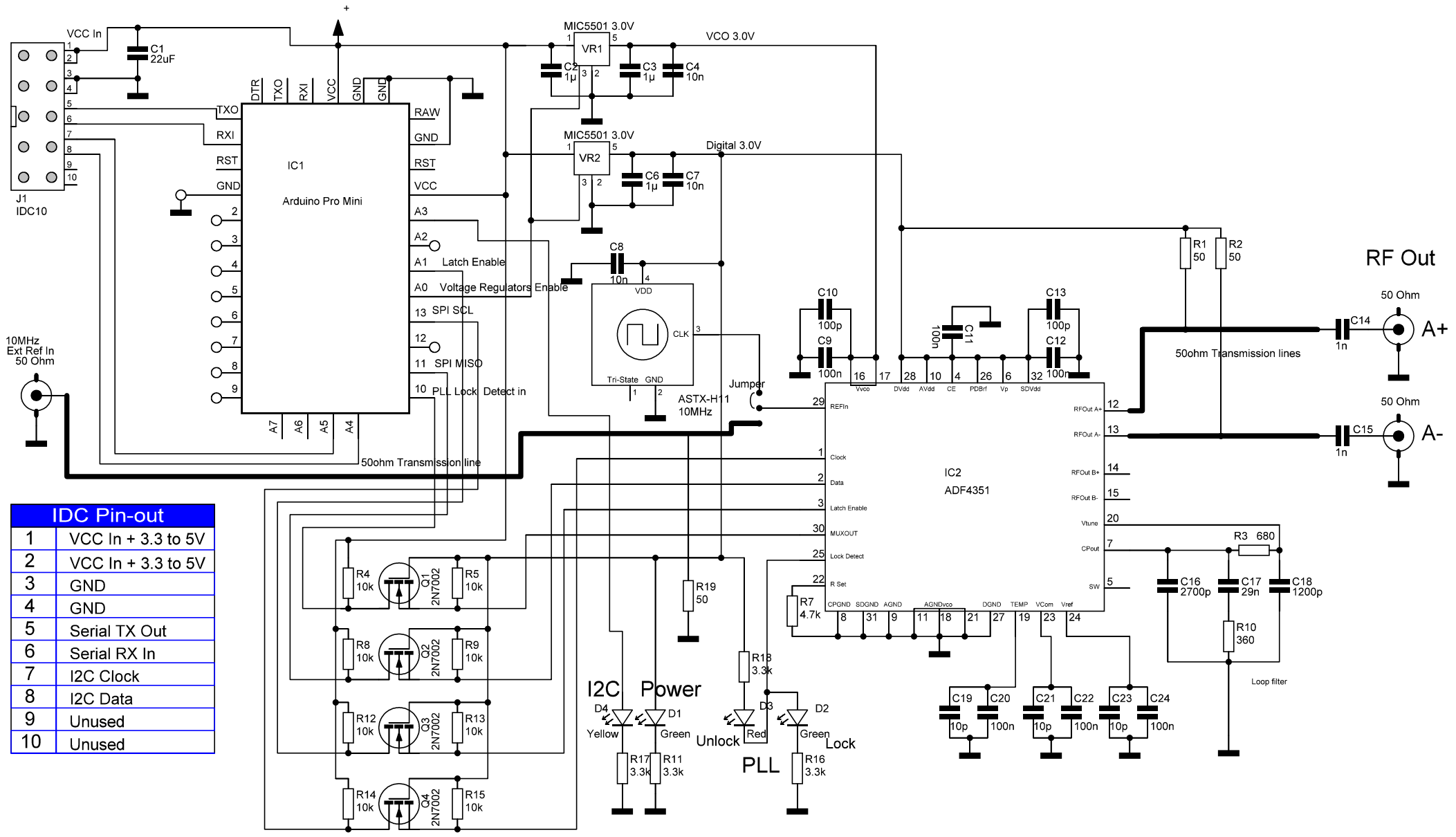

IDC Pin-out	
1	VCC In + 3.3 to 5V
2	VCC In + 3.3 to 5V
3	GND
4	GND
5	Serial TX Out
6	Serial RX In
7	I2C Clock
8	I2C Data
9	Unused
10	Unused

Prod Version	Revision	Revision date
	4	2018-06-02
Prod Name		
34MHz to 4.4GHz Frequency Synthesizer		