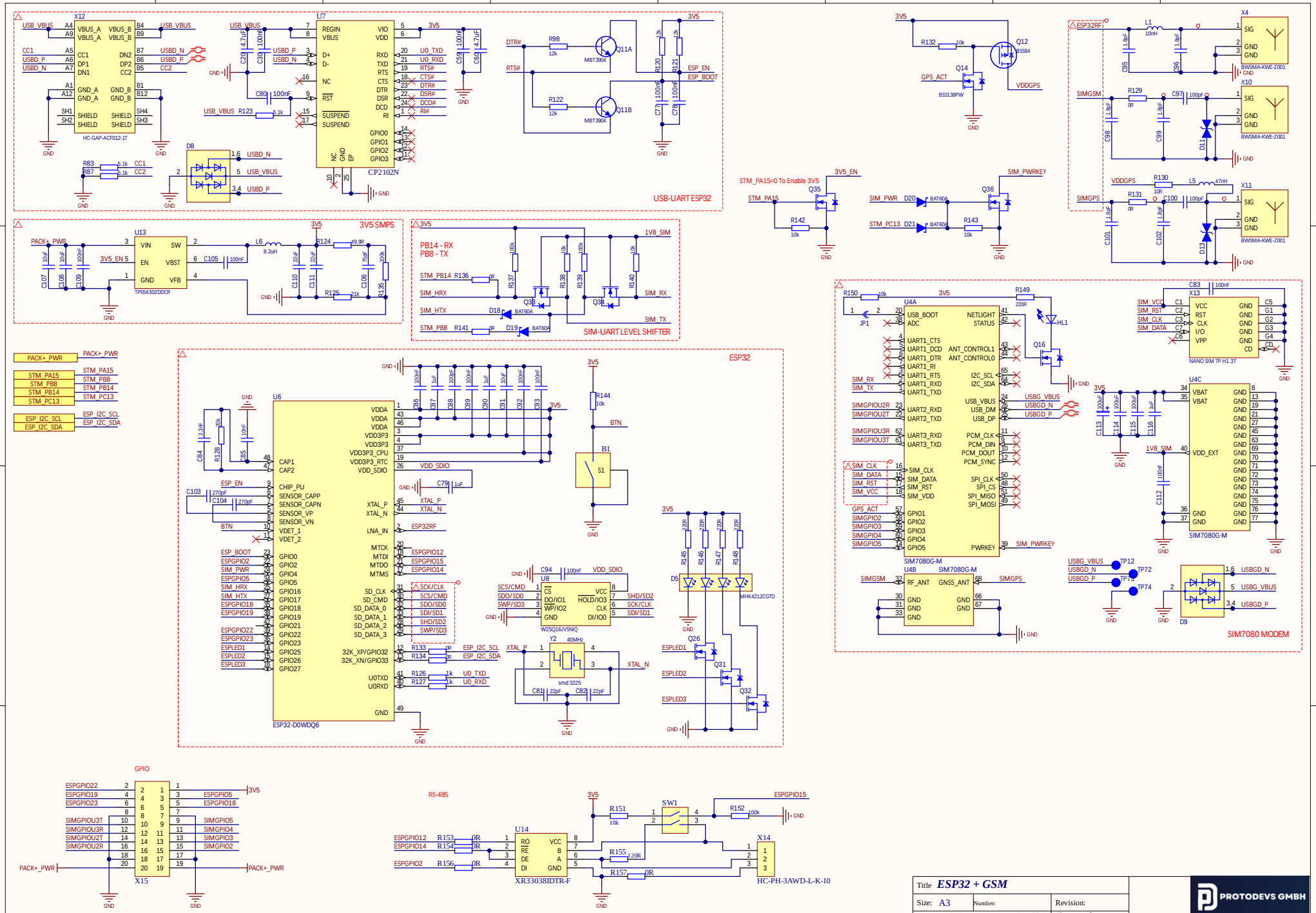

Title	*ESP32 + GSM*
Size: A3	Number:
Revision:	
Date: 2/28/2025	Time: 10:44:33 AM Sheet 4 of 4
File: C:\Users\Administrator\Downloads\PD-Charger_GSM_V2.4-GSM-2025-02-11\SCH\SCH_PD-Charger_GSM_V1-0_004.SchDoc	

PROTODEVS GMBH