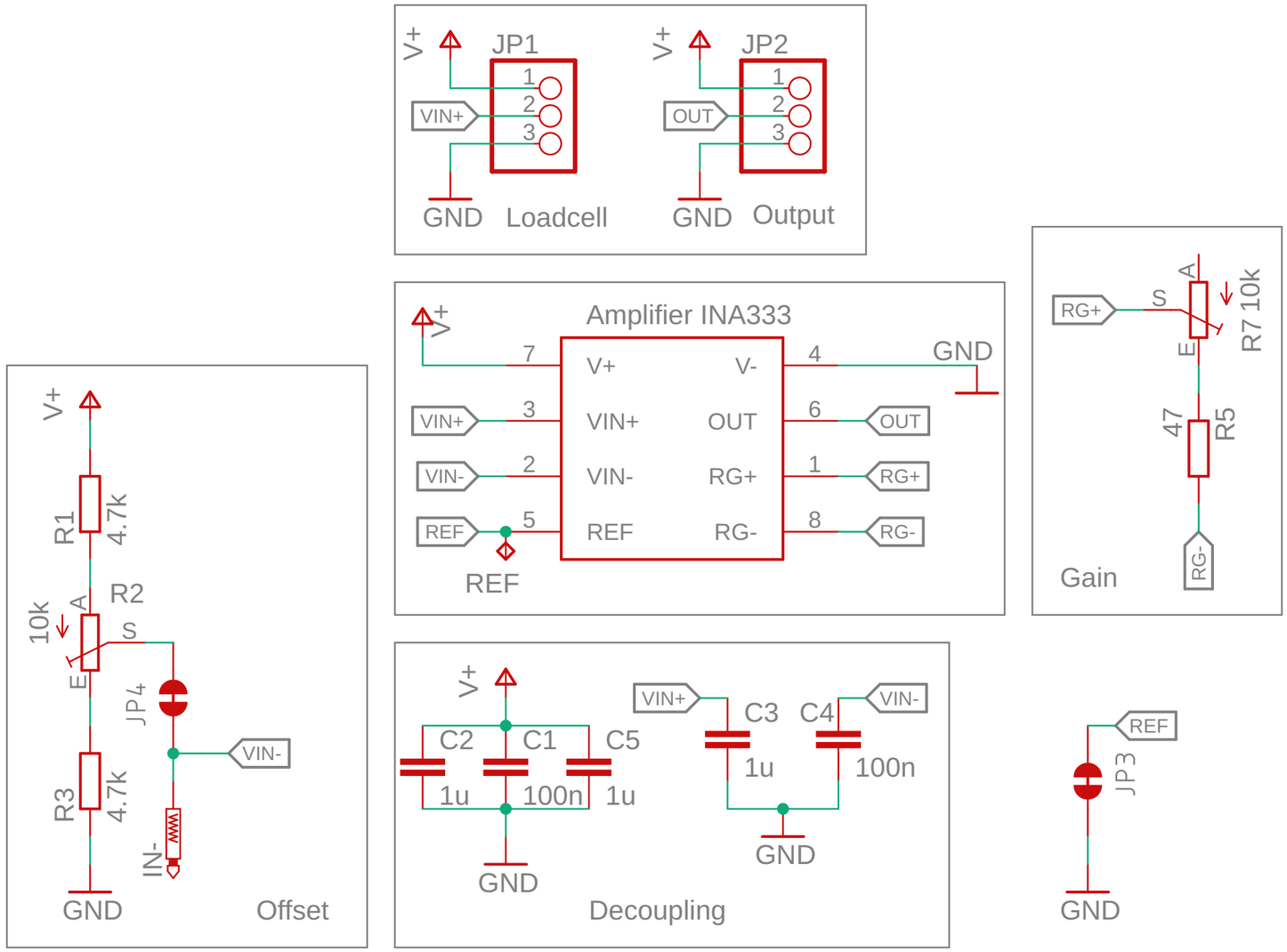

Could also use >1u for C5

When using a differential input it is recommended to use the same value for C3 and C4